Important information
Serious risk of injury

When working on the engine, e.g. when adjusting the drive belts and clutch, or when changing oil, it is important not to start the engine. The engine could be damaged, but more importantly there is a serious risk of injury.

For this reason, always secure the starting device or disconnect a battery cable before working on the engine. This is especially important if the engine has a remote starter or automatic starting.

WARNING!

This warning symbol and text can be found next to maintenance items where it is particularly important to bear in mind the risk of injury.

Operator's manual
DC13 XPI Industrial engine
en-GB 3 446 018

Issue 4.0

IMPORTANT!

The owner is responsible for making sure that maintenance is carried out on time and in accordance with the instructions.

The owner must entrust the maintenance, renewal, and repair of emission-related components and systems to a qualified workshop or person.

WARNING: This engine can expose you to chemicals including diesel engine exhaust which is known to the State of California to cause cancer and birth defects or other reproductive harm.
For exposures to diesel engine exhaust:

- Always start and operate the engine in a well-ventilated area.
- If in an enclosed area, vent the exhaust to the outside.
- Do not modify or tamper with the exhaust system.
- Do not idle the engine except as necessary.

For more information go to www.P65Warnings.ca.gov.

404 101

Start of warranty 3
Scania Power Solutions engine warranty for industrial engines 4
Emission control systems warranty for USA . 4
Emission control warranty statement for California, USA 8
Emission control system warranty for China 11
Emission control system warranty for South Korea 15
Introduction 19
Certification 19
Partly Completed Machinery 20
Output classes 21
Environment and safety 22
Environmental liability 22
Information on parts with particularly hazardous substances 22
Safety 22
Warnings and advisories 23
Engine data plate 29
Component identification 30
Engine 30
Exhaust gas aftertreatment 31
Starting and running 32
Checks before first start 32
Checks before running 34
Starting the engine 34
Sound from the engine 34
Driving 35
Engine shutdown. 45
Checks after running 45
Transporting engines. 46
Maintenance 47
Cleanliness 48
Engines with few hours of operation 51
Maintenance intervals 52
Lubrication system 56
Oil grade 56
Oil analysis 59
Checking the oil level 60
Changing the oil 61
Renewing the oil filter. 64
Air cleaner 70
Reading the vacuum indicator. 71
Renewing the air cleaner filter element and safety cartridge 72
Cooling system 73
Coolant 73
Checking the coolant level 77
Checking the coolant's antifreeze and corrosion protection 78
Changing the coolant and cleaning the cooling system 79
Fuel system 87
Cleanliness requirements 87
Checking the fuel level. 87
Renewing the fuel filters 88
Renewal, spin-on filter 92
Renewal – Water separating prefilter, spin-on filter 93
Venting the fuel system 94
Other 96
Checking the drive belt 96
Checking for leakage 98
Checking and adjusting the valve clearance .99
Renewing the reductant filter. 106
Cleaning the reductant tank filler filter 107
Checking venting functionality 107
Renewing the venting filter 108
Renewing the particulate filter. 109
Fuel quality requirements 115
Diesel 115
Biodiesel (FAME) 117
Renewable diesel (HVO) 117
Gas-to-liquids (GTL) 117
Reductant for SCR 118
Engine preservation 119
Preservative products 119
Preparations for storage 121
Technical data 123
General data 123
Lubrication system. 123
Intake system 124
Cooling system. 124
Fuel system. 124
Electrical system 124
Tightening torque for screw joints 125
Screws and nuts 125
Hose clamps 126
Scania Assistance 127

© Scania CV AB 2026, Sweden

Start of warranty

The more Scania knows about you, your company and your equipment, the more effectively we can adapt our services to you. If you have started to use a new Scania engine, it is very important that you send in the warranty start report to Scania immediately. Quite simply, Scania needs to register all the details on engine ownership etc. in order to carry out monitoring for you.

You can report the start of the warranty on the Scania website: www.scania.com.

Note:

If you do not send in the warranty report, the engine is not covered by the accompanying Scania warranty.

Also fill in below the details you enter in the warranty report. These details can facilitate contact with a workshop, for example. The engine serial number is on the engine data plate and is also engraved on the cylinder block.

Engine serial number (e.g. 1111111)

Ship ID (for example MMSI 111111111 or IMO 1111111)

Start date (yyyy-mm-dd)

Company name

Contact person

Phone number

Email address

Address

Postal code

Post town

State/County

Country

© Scania CV AB 2026, Sweden

Scania Power Solutions engine warranty for industrial engines

Emission control systems warranty for USA

IMPORTANT!

Only applicable to engines used in the U.S.A.

Table of Contents

General warranty provisions	4
Warranty period	4
Parts covered by the Warranty	5
General warranty limitations	6
Specific warranty exclusions	7
Customer support	7

Emission control system warranty statement

General warranty provisions

The emission control systems of your new Scania Engines (“Scania”) industrial diesel engine were designed, built and tested using genuine parts, and were certified as being in conformity with federal emission control regulations. Scania warrants to the original owner, and to each subsequent owner, of a new Scania industrial diesel engine (“You”) that the engine:

1. Was designed, built and equipped so as to conform at the time of sale with all applicable regulations under Section 213 of the Clean Air Act, 42 U.S.C. § 7547, for their full useful life and designed, built and equipped so as to conform with all applicable regulations adopted by the California Air Resources Board pursuant to its authority under Chapters 1 and 2, Part 5, Division 26 of the California Health and Safety Code, and;
2. Is free from defects in material and workmanship which would cause such engine to fail to conform to applicable regulations for its warranty period or otherwise cause the failure of a warranted part to be identical in all material respects to the part as described in the engine manufacturer's application for certification.

Where a warrantable condition exists, Scania will repair your heavy-duty off-road engine at no cost to You including diagnosis, parts, and labor.

Warranty period

This warranty shall apply for one of the following periods, whichever occurs first:

- 3,000 hours of operation as determined by a device to measure hours of use, or
- Five years

Each engine is equipped with a device to measure hours of use. If that device fails to account for hours of use due to defects in materials or workmanship, the engine shall be warranted for a period of five years. The warranty period shall begin on the date the engine is delivered to the first ultimate purchaser who, in good faith, purchases the engine for purposes other than imminent resale.

The Warranty on emission-related parts shall be interpreted as follows:

1. Any warranted part which is not scheduled for replacement as required maintenance in Scania's written instructions for maintenance and use of the engine by owner shall be warranted for the warranty period defined above. If any such part fails during the period of warranty coverage, it shall be repaired or replaced by the engine manufacturer according to Subsection (4) below. Any such part repaired or replaced under the Warranty shall be warranted for the remaining warranty period.
2. Any warranted part which is scheduled only for regular inspection in Scania's written instructions for maintenance and use of the engine by owner shall be warranted for the warranty period defined above. A statement in such written instructions to the effect of “repair or replace as necessary” shall not reduce the period of warranty coverage. Any such part repaired or replaced under warranty shall be warranted for the remaining warranty period.

© Scania CV AB 2026, Sweden

3. Any warranted part which is scheduled for replacement as required maintenance in Scania's written instructions for maintenance and use of the engine by owner shall be warranted for the period of time prior to the first scheduled replacement point for that part. If the part fails prior to the first scheduled replacement, the part shall be repaired or replaced by the engine manufacturer according to Subsection (4) below. Any such part repaired or replaced under warranty shall be warranted for the remainder of the period prior to the first scheduled replacement point for the part.
4. Repair or replacement of any warranted part under the warranty provisions of this article shall be performed at no charge to the owner at a warranty station.
5. Notwithstanding the provisions of Subsection (4) above, warranty services or repairs shall be provided at all manufacturer distribution centers that are franchised to serve the subject engines.
6. The owner shall not be charged for diagnostic labor that leadsto the determination that a warranted part is in fact defective, provided that such diagnostic work is performed at a warranty station.
7. The engine manufacturer shall be liable for damages to other engine components proximately caused by a failure under warranty of any warranted part.
8. Throughout the engine's warranty period defined above, the engine manufacturer shall maintain a supply of warranted parts sufficient to meet the expected demand for such parts.
9. Any replacement part, as defined in Section 1900(b), Title 13 of the California Code of Regulations, may be used in the performance of any maintenance or repairs and must be provided without charge to the owner. It is not necessary for replacement parts to be the same brand or by the same manufacturer as the original part sold with the engine. Such use shall not reduce the warranty obligations of the engine manufacturer.
10. Add-on or modified parts, as defined in Section 1900(b), Title 13 of the California Code of Regulations, that are not exempted by the California Air Resources Board may not be used. The use of any non-exempted add-on or modified parts shall be grounds for disallowing a warranty claim made in accordance with this article. The engine manufacturer shall not be liable under this article to warrant failures of warranted parts caused by the use of a non-exempted add-on or modified part.
11. The Executive Officer of the California Air Resources Board may request, and in such case, the engine manufacturer shall provide, any documents which describe that manufacturer's warranty procedures or policies.

Parts covered by the Warranty

The following is a list of parts considered to be part of the Emission Control Systems covered by the Emission Warranty for Scania industrial engines which were built to conform to federal and California emission control regulations:

1. Fuel injection system.
2. Air induction system.
3. Exhaust manifold system.
4. Smoke puff limiter (included in ECU).
5. Oil filler cap.
6. EGR system (when applicable):
   a) Cooler.
   b) EGR valve.
7. Exhaust brake (when applicable).
8. NOx sensors:
   a) NOx sensor, engine out.
   b) NOx sensor, tail pipe.
9. DOC (when applicable).
10. SCR system:
    a) DEF tank.
    b) DEF tank level, temperature and quality sensors.
    c) DEF hose.
    d) DEF injector.
    e) DEF injector pressure and temperature sensors.
    f) Evaporator.
    g) SCR catalyst inlet temperature sensor.
    h) SCR catalyst including the ammonia-slip catalyst.
    i) SCR control unit (EEC3).

© Scania CV AB 2026, Sweden

11. Miscellaneous items used in the above system:
    a) Electronic control unit (ECU), sensors, wiring harnesses.
    b) Hoses, belts, connectors, assemblies, clamps, fittings tubing, sealing gaskets or devices and mounting hardware.
    c) Pulleys, belts and idlers.
    d) Emission control information label.

IMPORTANT!

This list does not include all expendable maintenance parts.

- Expendable emission related parts requiring scheduled maintenance are warranted until their first scheduled replacement point.
- Emission related parts scheduled for inspection and replacement only as necessary are not considered expendable and if repaired or replaced under warranty shall be warranted for the remaining warranty period.

See Specific Warranty Exclusions below.

General warranty limitations

To retain the dependability of the exhaust emission control originally built into your Scania industrial diesel engine, it is essential that the engine is installed according to Scania installation instructions and emission certificates. Your engine is designed to operate on diesel fuel only. Use of any other fuel may result in your engine no longer operating in compliance with state or federal emissions requirements. The use of alternative fuels shall not void the warranties on any engine certified to use such fuel.

In addition, as the engine owner, You are responsible for the performance of all scheduled maintenance listed in your owner's manual, and all necessary repairs, on your new Scania industrial diesel engine. Scania may deny a warranty claim if the engine or part has failed due to abuse, neglect, improper maintenance or unapproved modifications.

Receipts covering the performance of regular maintenance should be retained in the event questions arise concerning maintenance. The receipts should be transferred to each subsequent owner of the engine with the emission warranted engine. Scania cannot, however, deny warranty solely for the lack of receipts or for your failure to ensure the performance of all scheduled maintenance.

The Warranty covers the cost of diagnosis, repair and replacement parts and services of warranted components and systems performed by an authorized Scania distributor or dealer using genuine Scania parts. You may elect to have maintenance, replacement or repair of these components and systems performed by any repair establishment or individual without invalidating the Warranty.

The use of other than Scania replacement parts also does not invalidate the warranty on other components unless such parts cause damage to warranted parts. However, the cost of such services or parts will not be covered by the Warranty.

You are responsible for initiating the warranty process. The California Air Resources Board suggests that You present your heavy-duty off-road engine to an authorized Scania dealer as soon as a problem exists. The warranty repairs should be completed by the dealer as expeditiously as possible.

IMPORTANT!

Use of replacement parts which are not of equivalent quality may impair the effectiveness of emission control systems. Accordingly, it is recommended that only Scania repair or replacement parts be used for maintenance, repair or replacement of emission control systems.

If other than Scania parts are used for maintenance, repair or replacement, the owner should obtain assurance that such parts are warranted by their manufacturer to be equivalent to genuine Scania parts.

© Scania CV AB 2026, Sweden

Specific warranty exclusions

This warranty **does not** cover:

1. Malfunctions in any part caused by any of the following: misuse, abuse, improper adjustments, modifications, alteration, tampering, disconnection, improper or inadequate maintenance, or use of fuels not recommended for the engine as described in the Operator's Manual.
2. Engine installation, including cooling system, intake system and exhaust system installation, that is not completed in accordance with the Scania installation instructions and emissions certificate for this engine type.
3. Damage resulting from accidents, acts of nature or other events beyond the control of Scania.
4. The replacement of expendable maintenance items such as filters, hoses, belts, oil, thermostat, exhaust system and coolant made in connection with scheduled maintenance services once these parts have been replaced.
5. Replacement items which are not genuine Scania parts or not authorized by Scania.
6. Inconvenience, loss of use of the engine or commercial loss.
7. Any engine on which the actual use cannot be accurately determined due to a failure of the device to track hours of use unrelated to defects in materials or workmanship.
8. Any engine operating outside the United States.

Customer support

In the event that You do not receive the warranty service to which You believe You are entitled under the Warranty, or if You need additional support or information concerning the Warranty, please contact:

Scania USA, Inc.

Address: 121 Interpark Blvd, suite 1002, 78216, San Antonio, Texas

Mailing Adress: 121 Interpark Blvd, suite 1002, 78216, San Antonio, Texas

Telephone: +1 210 403 0007

Fax: +1 210 403 0211

E-mail: na.contact@scania.com

California customers shall also be furnished a copy of the California Emission Control Warranty Statement applicable to each new Scania engine purchased.

© Scania CV AB 2026, Sweden

Emission control warranty statement for California, USA

Your warranty rights and obligations

The California Air Resources Board is pleased to explain the emission control system warranty on your 2025 engine. In California, new heavy-duty off-road engines must be designed, built and equipped to meet the State's stringent anti-smog standards. Scania CV AB must warrant the emission control system on your engine for the periods of time listed below provided there has been no abuse, neglect or improper maintenance of your engine.

Your emission control system may include parts such as the fuel injection system and the air induction system. Also included may be hoses, belts, connectors and other emission-related assemblies.

Where a warrantable condition exists, Scania CV AB will repair your heavy-duty off-road engine at no cost to you including diagnosis, parts and labor.

Manufacturer's warranty coverage

The 2025 heavy-duty off-road engines are warranted for a period of five years or 3,000 hours, whichever occurs first. If any emission-related part on your engine is defective, the part will be repaired or replaced by Scania CV AB.

Owner's warranty responsibilities

- As the off-road engine owner, you are responsible for the performance of the required maintenance listed in your owner's manual. Scania CV AB recommends that you retain all receipts covering maintenance on your off-road engine, but Scania CV AB cannot deny warranty solely for the lack of receipts or for your failure to ensure the performance of all scheduled maintenance.
- As the off-road engine owner, you should however be aware that Scania CV AB may deny you warranty coverage if your off-road engine or a part has failed due to abuse, neglect, improper maintenance or unapproved modifications.
- Your engine is designed to operate on ultra low-sulfur diesel fuel only. Use of any other fuel may result in your engine no longer operating in compliance with California's emissions requirements.
- You are responsible for initiating the warranty process. The ARB suggests that you present your off-road engine to a Scania CV AB dealer as soon as a problem exists. The warranty repairs should be completed by the dealer as expeditiously as possible.

If you have any questions regarding your warranty rights and responsibilities, you should contact Scania U.S.A. Inc +1-210-403-0007.

© Scania CV AB 2026, Sweden

SCR catalytic converter

WARNING!

The SCR catalytic converter contains vanadium pentoxide, a chemical known to the State of California to cause cancer.

The SCR catalytic converter is fitted in the silencer and does not constitute a health hazard during normal use and handling.

When carrying out work on the SCR catalytic converter which may result in exposure to dust, safety precautions must be taken. Such work includes, for example, opening the silencer machining and scrapping the SCR catalytic converter.

Safety precautions when working on the SCR system.

- Inhalation: If dust is inhaled, the person should be provided with fresh air immediately. Seek medical attention.
- Eye contact: Rinse eyes with water immediately. If irritation persists, seek medical attention.
- Skin contact: Wash with water and soap. Remove contaminated clothes.
- Ingestion: If large amounts have been ingested, drink plenty of water and induce vomiting. Seek medical attention.

Environmental hazards

- Vanadium pentoxide is toxic to water organisms and can cause detrimental long term effects to water environment.

Environmental protection measures

- The SCR catalytic converter is a manufactured article that contains vanadium pentoxide, a hazardous substance. Before disposing of, or scrapping, a spent SCR catalytic converter, it should be tested for any hazardous characteristics (ignitability, corrosivity, reactivity, acute hazardousness, and toxicity), as those categories are described in 22 CCR § 66261.30. If the spent SCR catalytic converter exhibits hazardous characteristics and is being disposed of, it will be considered by the State of California to be a hazardous waste subject to Title 22, California Code of Regulations. Before disposing of hazardous waste, review and follow all pertinent federal and California requirements.
- Vanadium pentoxide is a listed commercial chemical product - P120 - pursuant to 22 CCR § 66261.33(e). According to the State of California, commercial chemical products that are discarded or intended to be discarded are hazardous wastes and are subject to all provisions of Title 22, California Code of Regulations. Before disposing of vanadium pentoxide, review and follow all pertinent federal and California requirements.
- If the SCR catalytic converter is opened for maintenance, any dust spillages from the catalyst should be collected and tested for the presence of vanadium pentoxide prior to proper disposal. Dust spillages should also be tested for any hazardous characteristics (ignitability, corrosivity, reactivity, acute hazardousness, and toxicity), as those categories are described in 22 CCR § 66261.30, prior to proper disposal. If the dust contains either vanadium pentoxide or exhibits hazardous characteristics and is being disposed of, it will be considered by the State of California to be a hazardous waste subject to Title 22, California Code of Regulations. Before disposing of hazardous waste, review and follow all pertinent federal and California requirements.

© Scania CV AB 2026, Sweden

- Do not dispose of the spent SCR catalytic converter or its constituent parts into any waterways, storm drains or sanitary sewers.

WARNING!

The SCR catalytic converter contains vanadium pentoxide, a chemical known to the State of California to cause cancer.

Additional considerations when working on the SCR system

- Carry out work on the SCR catalytic converter in all well ventilated area. Use protective goggles and gloves if there is any risk of splashing or spraying of reductant or coolant.
- When engine is running, the exhaust system parts can reach such high temperatures that there is a risk of personal injury. Make sure that the exhaust system temperature has decreased to a suitable level before starting to work.
- The SCR system is heated by water from the engine cooling system. The cooling system runs at overpressure and when the engine is hot the coolant is hot. Do not open any hoses without first stopping the coolant flow in the hose.
- A P3 type respirator/filter mask or a type FFP3 fine dust musk, protective goggles and gloves should be used for any work where there is a risk of exposure to dust from the SCR catalytic converter.
- Use a disposable overall and dispose of it properly after machining.
- Eating, drinking or smoking while working is not permitted.
- Any dust from the SCR catalytic converter should be removed using a vacuum cleaner with microfilter to minimize exposure.
- Make sure that the work surface is cleaned after completed work; Vacuum first then swab.
- Make sure you clean your hands after working with SCR catalytic converter to avoid ingestion.
- Work done on the SCR catalytic converter may generate waste considered by the State of California to be a hazardous waste subject to Title 22, California Code of Regulations. Before disposing of hazardous waste, review and follow all pertinent federal and California requirements.

© Scania CV AB 2026, Sweden

Emission control system warranty for China

General warranty provisions

The emission control systems of your new Scania Power Solutions (“Scania”) industrial diesel engine were designed, built and tested using genuine parts, and were certified as being in conformity with federal emission control regulations. Scania warrants to the original owner, and to each subsequent owner, of a new Scania industrial diesel engine (“You”) that the engine:

1. Was designed, built and equipped so as to conform at the time of sale with all applicable regulations HJ 2014-2020 and GB 20891-2014 ,for their full useful life and designed, built and equipped so as to conform with all applicable regulations adopted by the National Standard of the People’s Republic of China of pursuant to its authority.
2. Is free from defects in material and workmanship which would cause such engine to-fail to conform to applicable regulations for its warranty period or otherwise cause the failure of a warranted part to be identical in all material respects to the part as described in the engine manufacturer's application for certification. Where a warrantable condition exists, Scania will repair your heavy-duty off-road engine at no cost to You including diagnosis, parts, and labour.

Warranty period

This warranty shall apply for one of the following periods, whichever occurs first:

- 3,000 hours of operation as determined by a device to measure hours of use, or
- Five years

Each engine is equipped with a device to measure hours of use. If that device fails to account for hours of use due to defects in materials or workmanship, the engine shall be warranted for a period of five years. The warranty period shall begin on the date the engine is delivered to the first ultimate purchaser who, in good faith, purchases the engine for purposes other than imminent resale.

The Warranty on emission-related parts shall be interpreted as follows:

1. Any warranted part which is not scheduled for replacement as required maintenance in Scania's written instructions for maintenance and use of the engine by owner shall be warranted for the warranty period defined above. If any such part fails during the period of warranty coverage, it shall be repaired or replaced by the engine manufacturer according to Subsection (4) below. Any such part repaired or replaced under the Warranty shall be warranted for the remaining warranty period.
2. Any warranted part which is scheduled only for regular inspection in Scania's written instructions for maintenance and use of the engine by owner shall be warranted for the warranty period defined above. A statement in such written instructions to the effect of “repair or replace as necessary” shall not reduce the period of warranty coverage. Any such part repaired or replaced under warranty shall be warranted for the remaining warranty period.
3. Any warranted part which is scheduled for replacement as required maintenance in Scania's written instructions for maintenance and use of the engine by owner shall be warranted for the period of time prior to the first scheduled replacement point for that part. If the part fails prior to the first scheduled replacement, the part shall be repaired or replaced by the engine manufacturer according to Subsection (4) below. Any such part repaired or replaced under warranty shall be warranted for the remainder of the period prior to the first scheduled replacement point for the part.
4. Repair or replacement of any warranted part under the warranty provisions of this article shall be performed at no charge to the owner at a warranty station.
5. Not withstanding the provisions of Subsection (4) above, warranty services or repairs shall be provided at all manufacturer distribution centers that are franchised to serve the subject engines.
6. The owner shall not be charged for diagnostic labor that leadsto the determination that a warranted part is in fact defective, provided that such diagnostic work is performed at a warranty station.
7. The engine manufacturer shall be liable for damages to other engine components proxi-

© Scania CV AB 2026, Sweden

mately caused by a failure under warranty of any warranted part.

8. Throughout the engine's warranty period defined above, the engine manufacturer shall maintain a supply of warranted parts sufficient to meet the expected demand for such parts.
9. Any replacement part may be used in the performance of any maintenance or repairs and must be provided without charge to the owner. It is not necessary for replacement parts to be the same brand or by the same manufacturer as the original part sold with the engine. Such use shall not reduce the warranty obligations of the engine manufacturer.
10. Add-on or modified parts, may not be used. The use of any non-exempted add-on or modified parts shall be grounds for disallowing a warranty claim made in accordance with this article. The engine manufacturer shall not be liable under this article to warrant failures of warranted parts caused by the use of a non-exempted add-on or modified part.

Parts covered by the Warranty

The following is a list of parts considered to be part of the Emission Control Systems covered by the Emission Warranty for Scania industrial engines:

1. Fuel injection system.
2. Air induction system.
3. Exhaust manifold system.
4. Smoke puff limiter (included in ECU).
5. Oil filler cap.
6. EGR system(when applicable).
   a) Cooler.
   b) EGR valve.
7. Exhaust brake (when applicable).
8. NOx sensors:
   a) NOx sensor, engine out.
   b) NOx sensor, tail pipe.
9. DOC (when applicable).
10. SCR system:
    a) DEF tank.
    b) DEF tank level, temperature and quality sensors.
    c) DEF hose.
    d) DEF injector.
    e) DEF injector pressure and temperature sensors.
    f) Evaporator.
    g) SCR catalyst inlet temperature sensor.
    h) SCR catalyst including the ammonia-slip catalyst.
    i) SCR control unit (EEC3).
    j) DPF.

IMPORTANT!

This list does not include all expendable maintenance parts.

- Expendable emission related parts requiring scheduled maintenance are warranted until their first scheduled replacement point.
- Emission related parts scheduled for inspection and replacement only as necessary are not considered expendable and if repaired or replaced under warranty shall be warranted for the remaining warranty period.

See Specific Warranty Exclusions below.

© Scania CV AB 2026, Sweden

General warranty limitations

To retain the dependability of the exhaust emission control originally built into your Scania industrial diesel engine, it is essential that the engine is installed according to Scania installation instructions and emission certificates. Your engine is designed to operate on diesel fuel only. Use of any other fuel may result in your engine no longer operating in compliance with state or federal emissions requirements. The use of alternative fuels shall not void the warranties on any engine certified to use such fuel.

In addition, as the engine owner, You are responsible for the performance of all scheduled maintenance listed in your owner's manual, and all necessary repairs, on your new Scania industrial diesel engine. Scania may deny a warranty claim if the engine or part has failed due to abuse, neglect, improper maintenance or unapproved modifications.

Receipts covering the performance of regular maintenance should be retained in the event questions arise concerning maintenance. The receipts should be transferred to each subsequent owner of the engine with the emission warranted engine. Scania cannot, however, deny warranty solely for the lack of receipts or for your failure to ensure the performance of all scheduled maintenance.

The Warranty covers the cost of diagnosis, repair and replacement parts and services of warranted components and systems performed by an authorized Scania distributor or dealer using genuine Scania parts. You may elect to have maintenance, replacement or repair of these components and systems performed by any repair establishment or individual without invalidating the Warranty.

The use of other than Scania replacement parts also does not invalidate the warranty on other components unless such parts cause damage to warranted parts. However, the cost of such services or parts will not be covered by the Warranty.

You are responsible for initiating the warranty process. It is suggested that You present your heavy-duty off-road engine to an authorized Scania dealer as soon as a problem exists. The warranty repairs should be completed by the dealer as expeditiously as possible.

IMPORTANT!

Use of replacement parts which are not of equivalent quality may impair the effectiveness of emission control systems. Accordingly, it is recommended that only Scania repair or replacement parts be used for maintenance, repair or replacement of emission control systems.

If other than Scania parts are used for maintenance, repair or replacement, the owner should obtain assurance that such parts are warranted by their manufacturer to be equivalent to genuine Scania parts.

© Scania CV AB 2026, Sweden

Specific warranty exclusions

This warranty **does not** cover:

1. Malfunctions in any part caused by any of the following: misuse, abuse, improper adjustments, modifications, alteration, tampering, disconnection, improper or inadequate maintenance, or use of fuels not recommended for the engine as described in the Operator's Manual.
2. Engine installation, including cooling system, intake system and exhaust system installation, that is not completed in accordance with the Scania installation instructions and emissions certificate for this engine type.
3. Damage resulting from accidents, acts of nature or other events beyond the control of Scania.
4. The replacement of expendable maintenance items such as filters, hoses, belts, oil, thermostat, exhaust system and coolant made in connection with scheduled maintenance services once these parts have been replaced.
5. Replacement items which are not genuine Scania parts or not authorized by Scania.
6. Inconvenience, loss of use of the engine or commercial loss.
7. Any engine on which the actual use cannot be accurately determined due to a failure of the device to track hours of use unrelated to defects in materials or workmanship.
8. Any engine operating outside China.

Customer support

In the event that You do not receive the warranty service to which You believe You are entitled under the Warranty, or if You need additional support or information concerning the Warranty, please contact:

Scania China.

Address: 23-24F, Capital Square, 268 Hentong Road, Jing'an District, Shanghai 200070

Mailing address: 23-24F, Capital Square, 268 Hentong Road, Jing'an District, Shanghai 200070

Telephone: +86-21-6618 9900

Fax: +86-21-6618 9900

E-mail: lucas.liu@scania.com

© Scania CV AB 2026, Sweden

Emission control system warranty for South Korea

General warranty provisions

The emission control systems of your new Scania Power Solutions (“Scania”) industrial diesel engine were designed, built and tested using genuine parts, and were certified as being in conformity with federal emission control regulations. Scania warrants to the original owner, and to each subsequent owner, of a new Scania industrial diesel engine (“You”) that the engine:

1. Was designed, built and equipped so as to conform at the time of sale with all applicable regulations MOE, Clean Air Conservation Act, Enforcement Decree of the Clean Air Conservation Act and some others, for their full useful life and designed, built and equipped so as to conform with all applicable regulations.
2. Is free from defects in material and workmanship which would cause such engine to-fail to conform to applicable regulations for its warranty period or otherwise cause the failure of a warranted part to be identical in all material respects to the part as described in the engine manufacturer's application for certification. Where a warrantable condition exists, Scania will repair your heavy-duty off-road engine at no cost to You including diagnosis, parts, and labour.

Warranty period

This warranty shall apply for one of the following periods, whichever occurs first:

- 3,000 hours of operation as determined by a device to measure hours of use, or
- Five years

Each engine is equipped with a device to measure hours of use. If that device fails to account for hours of use due to defects in materials or workmanship, the engine shall be warranted for a period of five years. The warranty period shall begin on the date the engine is delivered to the first ultimate purchaser who, in good faith, purchases the engine for purposes other than imminent resale.

The Warranty on emission-related parts shall be interpreted as follows:

1. Any warranted part which is not scheduled for replacement as required maintenance in Scania's written instructions for maintenance and use of the engine by owner shall be warranted for the warranty period defined above. If any such part fails during the period of warranty coverage, it shall be repaired or replaced by the engine manufacturer according to Subsection (4) below. Any such part repaired or replaced under the Warranty shall be warranted for the remaining warranty period.
2. Any warranted part which is scheduled only for regular inspection in Scania's written instructions for maintenance and use of the engine by owner shall be warranted for the warranty period defined above. A statement in such written instructions to the effect of “repair or replace as necessary” shall not reduce the period of warranty coverage. Any such part repaired or replaced under warranty shall be warranted for the remaining warranty period.
3. Any warranted part which is scheduled for replacement as required maintenance in Scania's written instructions for maintenance and use of the engine by owner shall be warranted for the period of time prior to the first scheduled replacement point for that part. If the part fails prior to the first scheduled replacement, the part shall be repaired or replaced by the engine manufacturer according to Subsection (4) below. Any such part repaired or replaced under warranty shall be warranted for the remainder of the period prior to the first scheduled replacement point for the part.
4. Repair or replacement of any warranted part under the warranty provisions of this article shall be performed at no charge to the owner at a warranty station.
5. Although the provisions of Subsection (4) above, warranty services or repairs shall be provided at all manufacturer distribution centers that are franchised to serve the subject engines.
6. The owner shall not be charged for diagnostic labor that leadsto the determination that a warranted part is in fact defective, provided that such diagnostic work is performed at a warranty station.
7. The engine manufacturer shall be liable for damages to other engine components proxi-

© Scania CV AB 2026, Sweden

mately caused by a failure under warranty of any warranted part.

8. Throughout the engine's warranty period defined above, the engine manufacturer shall maintain a supply of warranted parts sufficient to meet the expected demand for such parts.
9. Any replacement part may be used in the performance of any maintenance or repairs and must be provided without charge to the owner. It is not necessary for replacement parts to be the same brand or by the same manufacturer as the original part sold with the engine. Such use shall not reduce the warranty obligations of the engine manufacturer.
10. Add-on or modified parts, may not be used. The use of any non-exempted add-on or modified parts shall be grounds for disallowing a warranty claim made in accordance with this article. The engine manufacturer shall not be liable under this article to warrant failures of warranted parts caused by the use of a non-exempted add-on or modified part.

Parts covered by the Warranty

The following is a list of parts considered to be part of the Emission Control Systems covered by the Emission Warranty for Scania industrial engines:

1. Fuel injection system.
2. Air induction system.
3. Exhaust manifold system.
4. Smoke puff limiter (included in ECU).
5. Oil filler cap.
6. Exhaust brake (when applicable).
7. NOx sensors:
   a) NOx sensor, engine out.
   b) NOx sensor, tail pipe.
8. DOC (when applicable).
9. SCR system:
   a) DEF tank.
   b) DEF tank level, temperature and quality sensors.
   c) DEF hose.
   d) DEF injector.
   e) DEF injector pressure and temperature sensors.
   f) Evaporator.
   g) SCR catalyst inlet temperature sensor.
   h) SCR catalyst including the ammonia-slip catalyst.
   i) SCR control unit.
   j) Particulate filter.

IMPORTANT!

This list does not include all expendable maintenance parts.

- Expendable emission related parts requiring scheduled maintenance are warranted until their first scheduled replacement point.
- Emission related parts scheduled for inspection and replacement only as necessary are not considered expendable and if repaired or replaced under warranty shall be warranted for the remaining warranty period.

See Specific Warranty Exclusions below.

© Scania CV AB 2026, Sweden

General warranty limitations

To retain the dependability of the exhaust emission control originally built into your Scania industrial diesel engine, it is essential that the engine is installed according to Scania installation instructions and emission certificates. Your engine is designed to operate on diesel fuel only. Use of any other fuel may result in your engine no longer operating in compliance with state or federal emissions requirements. The use of alternative fuels shall not void the warranties on any engine certified to use such fuel.

In addition, as the engine owner, You are responsible for the performance of all scheduled maintenance listed in your owner's manual, and all necessary repairs, on your new Scania industrial diesel engine. Scania may deny a warranty claim if the engine or part has failed due to abuse, neglect, improper maintenance or unapproved modifications.

Receipts covering the performance of regular maintenance should be retained in the event questions arise concerning maintenance. The receipts should be transferred to each subsequent owner of the engine with the emission warranted engine. Scania cannot, however, deny warranty solely for the lack of receipts or for your failure to ensure the performance of all scheduled maintenance.

The Warranty covers the cost of diagnosis, repair and replacement parts and services of warranted components and systems performed by an authorized Scania distributor or dealer using genuine Scania parts. You may elect to have maintenance, replacement or repair of these components and systems performed by any repair establishment or individual without invalidating the Warranty.

The use of other than Scania replacement parts also does not invalidate the warranty on other components unless such parts cause damage to warranted parts. However, the cost of such services or parts will not be covered by the Warranty.

You are responsible for initiating the warranty process. It is suggested that You present your heavy-duty off-road engine to an authorized Scania dealer as soon as a problem exists. The warranty repairs should be completed by the dealer as expeditiously as possible.

IMPORTANT!

Use of replacement parts which are not of equivalent quality may impair the effectiveness of emission control systems. Accordingly, it is recommended that only Scania repair or replacement parts be used for maintenance, repair or replacement of emission control systems.

If other than Scania parts are used for maintenance, repair or replacement, the owner should obtain assurance that such parts are warranted by their manufacturer to be equivalent to genuine Scania parts.

© Scania CV AB 2026, Sweden

Specific warranty exclusions

This warranty **does not** cover:

1. Malfunctions in any part caused by any of the following: misuse, abuse, improper adjustments, modifications, alteration, tampering, disconnection, improper or inadequate maintenance, or use of fuels not recommended for the engine as described in the Operator's Manual.
2. Engine installation, including cooling system, intake system and exhaust system installation, that is not completed in accordance with the Scania installation instructions and emissions certificate for this engine type.
3. Damage resulting from accidents, acts of nature or other events beyond the control of Scania.
4. The replacement of expendable maintenance items such as filters, hoses, belts, oil, thermostat, exhaust system and coolant made in connection with scheduled maintenance services once these parts have been replaced.
5. Replacement items which are not genuine Scania parts or not authorized by Scania.
6. Inconvenience, loss of use of the engine or commercial loss.
7. Any engine on which the actual use cannot be accurately determined due to a failure of the device to track hours of use unrelated to defects in materials or workmanship.
8. Any engine operating outside South Korea.

Customer support

In the event that You do not receive the warranty service to which You believe You are entitled under the Warranty, or if You need additional support or information concerning the Warranty, please contact:

Scania Korea.

Adress: 150, Oegukgieop-ro, Sanam-myeon, Sacheon, Kyungnam, South Korea

Mailing adress: 150, Oegukgieop-ro, Sanam-myeon, Sacheon, Kyungnam, South Korea

Telephone: +82-55-851-5397

Fax: +82-55-851-5195

E-mail: hyunggu.lee@scania.com

© Scania CV AB 2026, Sweden

Introduction

This Operator's manual describes the operation and maintenance of Scania industrial engines.

The engines are direct-injection, liquid-cooled, four-stroke diesel engines with turbochargers. Certain engines are also equipped with exhaust gas aftertreatment management systems.

The engines are available with different output and engine speed settings. Engine power for the engine ordered is indicated on a plate located on the flywheel housing.

Note:

Only standard components are described in the operator's manual. Information about special equipment is contained in instructions from the various manufacturers.

To ensure the maximum performance and the longest service life for the engine, remember the following:

- Read through the Operator's manual before starting to use the engine. Even regular users of Scania engines will get new information from the Operator's manual.
- Always follow the maintenance instructions.
- Read the section on safety carefully.
- Read the section on cleanliness carefully.
- Get to know your engine so that you know what it can do and how it works.
- Always contact a workshop with qualified personnel for maintenance and repair.

The information in this Operator's manual was correct at the time of going to press. Scania reserves the right to make alterations without prior notice.

Certification

IMPORTANT!

For Scania to guarantee that the engine corresponds to its certified configuration, and take responsibility for any damage and injuries that occur, maintenance must be carried out in accordance with the instructions in this Operator's manual.

An emissions certified engine fulfils the emissions requirements for a particular range of application.

On each emissions certified engine there is a label which shows which requirements the engine fulfils. Scania guarantees that each such engine fulfils the emissions requirements for the range of application for which it is certified.

The following are required for the certified engine to fulfil the emissions requirements once it has been taken into service:

- Maintenance is to be carried out in accordance with the instructions in this Operator's manual.
- Maintenance and repairs of injection equipment are to be carried out by an authorised Scania workshop.
- The engine may only be modified with equipment that has been approved by Scania.
- Seals may be broken and setting data edited only once approval has been granted by Scania. Modifications may be made by authorised personnel only.
- Modifications affecting the exhaust and intake systems must be approved by Scania.

Otherwise, the instructions in the Operator's manual for the running and maintenance of the engine shall apply. Follow the safety precautions on the following pages.

© Scania CV AB 2026, Sweden

Partly Completed Machinery

SCANIA

3310124

DECLARATION OF INCORPORATION OF PARTLY COMPLETED MACHINERY IN ACCORDANCE WITH EC DIRECTIVE 2006/42 EC

SCANIA declares that engines referenced below are manufactured as Partly completed machinery in accordance with Machinery directive 2006/42/EC.

This partly completed machinery shall not be put into service in the European Community until the final machinery, into which it is to be incorporated, has been declared in conformity with the provisions of Directive 2006/42/EC and all applicable EC Directives.

The engines within any of the following generic engine family names comply with this declaration.

DC09 A, DI09 M
DC13 A, DI13 M
DC16 A, DI16 M
OC16 A, DC11 A

Sara Hermansson
Senior Vice President, Power Solutions
Södertälje, 5 March 2025
Scania CV AB, S-151 87 Södertälje, Sweden

489 643

© Scania CV AB 2026, Sweden

Output classes

Scania supplies engines in 4 different output classes:

ICFN, Continuous service: Intended for continuous use and an unlimited number of operational hours per year at a total load factor of 100% provided that the engine rotational speed is at least 85% of the engine nominal value. If the engine speed is below 85% of the nominal value, the rated power is available for 1 hour in a 6-hour period and the average load must not exceed 80% of the power at the current rotational speed.

IFN, Intermittent service: Intended for periodic use, where the rated power is available for one hour per six-hour period. The total load factor must not exceed 80 % of the rated power. Unlimited number of operational hours per year.

PRP, Prime Power: Intended for continual use and an unlimited number of operational hours with varying loads. For continuous operation and unlimited annual operating time with varying loads. Max. average load factor of 70% of rated power during 24 hours of operation. Permissible overload of max. 110% for maximum of 1 hour in 12-hour period. Max. 25 hours accumulated service time over 100% load per year. This power class applies to single-speed engines.

COP, Continuous power: Intended for continual use with a non-varying load and an unlimited number of operational hours.

The engine serial numbers and output classes for the engines that are used in this installation should be listed below: You can find the power class of your engine in the engine type data sheet on the Scania website, www.scania.com.

Engine serial number: _____

Motor type: _____

Engine power: _____ kW at _____ rpm

☐ **ICFN, Continuous service**

☐ **IFN, Intermittent service**

☐ **PRP, Prime power**

☐ **COP, Continuous Power**

© Scania CV AB 2026, Sweden

Environment and safety

Environmental liability

Scania develops and produces engines that are as environmentally-friendly as possible. Scania has made major investments in the reduction of harmful exhaust emissions in order to fulfil the environmental requirements in force in almost every market.

At the same time, we have been able to maintain a high level of performance quality and operating economy for Scania engines. To maintain these throughout the entire service life of the engine, it is important for the user to follow the instructions on driving, maintenance and fuel, lubricating oil and coolant as outlined in the Operator's manual.

Other green initiatives taken include ensuring that, following maintenance and repair, waste that is harmful to the environment (for example oil, fuel, coolant, filters and batteries) is disposed of accordance with the applicable environmental requirements.

Information on parts with particularly hazardous substances

Note:

A number of component parts on the engine contain materials with particularly hazardous substances.

The substances have properties that can have a serious and lasting effect on human health and the environment.

If a part or component parts contain more than 0.1% by weight of a substance listed on the REACH candidate list, the supplier must provide information about the substance.

The requirement is defined in Article 33 of the REACH Regulation (EC 2006/1907) and applies within the EU, Liechtenstein, Norway and Iceland.

https://echa.europa.eu/candidate-list-table.

A list of engine parts containing substances in the candidate list is provided by Scania.

https://sure.scania.com/reach.

According to Article 9 of the EU Waste Framework Directive ((EU) 2018/851), manufacturers of parts containing more than 0.1% by weight of a particular hazardous substance must communicate this to the EU Chemicals Agency (ECHA).

Scania supplies individual notification numbers in SCIP for affected vehicles.

https://sure.scania.com/

The notification number can be used to search the ECHA SCIP database.

https://echa.europa.eu/scip-database

Safety

The following pages contain a summary of the safety precautions to be complied with when operating and maintaining Scania engines. The equivalent text can also be found under the relevant maintenance item.

To prevent damage to the engine and to ensure that it runs optimally, follow the instructions in the warnings and advisories.

If the instructions are not followed, the warranty can cease to apply.

© Scania CV AB 2026, Sweden

Warnings and advisories

Different types of advisory

WARNING!

All advisories preceded by Warning! are very important. They warn of serious faults and incorrect operation that could lead to personal injury. **Example:**

Block the starting device when working on the engine. If the engine starts unexpectedly, there is a serious risk of injury.

IMPORTANT!

Advisories preceded by Important! warn of faults and incorrect operation that could lead to equipment being damaged. **Example:**

An excessive coolant temperature can cause engine damage.

Note:

Advisories preceded by Note: refer to information important to ensure the best possible operation and functionality. **Example:**

Leave the engine off for at least 7 minutes before you check the oil level.

Environment

This Operator's manual contains specially highlighted text with instructions to help protect the environment during maintenance. **Example:**

Use a suitable container. The fuel collected must be disposed of as specified in national and international laws and regulations.

REQUIREMENT!

Advisories preceded by Requirements! indicate mandatory actions or conditions that must be fulfilled. If these are not followed, there is a risk of malfunctions, damage to equipment or that the terms of the warranty will not apply. **Example:**

Use only fuel which fulfils the requirements in the section *Fuel quality requirements*.

Other symbols

For more information, see section *Maintenance*.

Dirt warning. Risk of engine breakdown.

Clean, remove dirt, lubricant or stains.

© Scania CV AB 2026, Sweden

Safety precautions for driving

Daily maintenance

Always carry out a visual inspection of the engine and engine compartment before starting the engine or when the engine has been switched off after operation.

This inspection should be done to detect fuel, oil or coolant leaks, or anything else that may require corrective action.

Fuel

WARNING!

The wrong fuel grade can cause breakdowns or stoppages by causing the injection system to malfunction. This can cause damage to the engine and, possibly, personal injury.

REQUIREMENT!

Use only fuel which fulfils the requirements in the Fuel quality requirements section.

Refuelling

WARNING!

During refuelling there is a risk of fire and explosion. The engine must be switched off and smoking is prohibited.

Never overfill the tank as the fuel needs space to expand. Make sure that the filler cap is fully closed.

Hazardous gases

WARNING!

Only start the engine in a well-ventilated area. The exhaust gases contain carbon monoxide and nitrogen oxides, which are toxic.

When the engine is run in an enclosed space, there must be an effective device to extract exhaust gases and crankcase gases.

Starter lock

IMPORTANT!

If the instrument panel is not fitted with a starter lock, the engine compartment should be locked to prevent unauthorised personnel from starting the engine. Alternatively, a lockable master switch or battery master switch can be used.

Starter gas

WARNING!

Never use starter gas or similar agents to help start the engine. This can cause an explosion in the intake manifold and possible injury.

Driving

WARNING!

The engine must not be run in environments where there is a risk of explosion, as all of the electrical or mechanical components can generate sparks.

Approaching a running engine always poses a safety risk. Parts of the body, clothes or dropped tools can get caught in rotating parts such as the fan and cause injury. For personal safety all rotating parts and hot surfaces must be fitted with guards.

Smoking

WARNING!

Smoking is prohibited:

- in the vicinity of flammable or explosive material, e.g. fuel, oils, batteries, chemicals
- when refuelling and in the vicinity of the filling station
- when working on the fuel system

© Scania CV AB 2026, Sweden

Safety precautions for handling materials

Fuel and lubricating oil

WARNING!

All fuels and lubricants as well as many chemicals are flammable. Always follow the instructions on the relevant packaging.

The work must be carried out on a cold engine. Fuel leaks and spillages on hot surfaces can cause fire.

Store used rags and other flammable materials safely so as to avoid spontaneous combustion.

Batteries

WARNING!

The batteries contain and form oxyhydrogen gas, particularly during charging. Oxyhydrogen gas is flammable and highly explosive.

There must be no smoking, naked flames or sparks near the batteries or the battery compartment. Incorrect connection of a battery cable or jump lead can cause a spark, which can cause the battery to explode.

Chemicals

WARNING!

Most chemicals such as glycols, anti-corrosive agents, preservative oils and degreasing agents, are harmful. Some chemicals, such as preservative oil, are also flammable. Always follow the safety precautions on the packaging.

Store chemicals and other harmful materials in approved and clearly marked containers, where they are inaccessible to unauthorised persons.

Environment

Excess and used chemicals must be disposed of as specified in national and international laws and regulations.

Reductant

Engines fitted with SCR systems use reductants (AdBlue®, DEF, ARLA 32 or AUS 32) in the reductant tank.

The reductant is not toxic, but it is still important to observe the following when working on the reductant circuit:

- If reductant comes into contact with your skin: Wash it off with soap and plenty of water.
- If reductant splashes in your eyes: Rinse immediately using an eye bath and then seek medical attention.
- Change out of clothes which have spills on.

REQUIREMENT!

Use only reductant which fulfils the requirements in the Reductant for SCR section.

© Scania CV AB 2026, Sweden

Safety precautions for maintenance

Switch off the engine

WARNING!

Working on a running engine always poses a safety risk. Parts of the body, clothes or dropped tools can get caught in rotating parts and cause injury.

Always switch off the engine before maintenance, unless otherwise indicated.

Make it impossible to start the engine: Remove any starter key, or cut the power using the main power switch or battery master switch and lock them.

Fit a warning plate somewhere appropriate, showing that work is being carried out on the engine.

Hot surfaces and fluids

WARNING!

There is always a risk of sustaining burns when an engine is hot. Particularly hot parts are branch pipes, turbochargers, oil sumps, and hot coolant and oil in pipes and hoses.

Lubrication system

WARNING!

Hot oil can cause burns and skin irritation. Wear protective gloves and eye protection when changing hot oil.

Make sure that there is no pressure in the lubrication system before starting work on it.

Make sure that the oil filler cover is fitted when starting and driving in order to avoid oil escaping.

Environment

Used oil must be disposed of as specified in national and international laws and regulations.

Cooling system

WARNING!

Never open the coolant filler cap when the engine is hot. Hot coolant and steam may spray out and cause burns. If the cover has to be opened do it slowly to release the pressure before removing the cover. Wear protective gloves as the coolant is still very hot.

Avoid skin contact with coolant as this may cause irritation to the skin. Wear eye protection and gloves when handling coolant.

Ethylene glycol can be fatal if ingested.

Environment

Used coolant must be disposed of as specified in national and international laws and regulations.

Fuel system

WARNING!

Maintenance and repairs of injection equipment are to be carried out by an authorised Scania workshop.

Always use Scania spare parts for the fuel and electrical systems. Scania spare parts are designed to minimise the risk of fire and explosion.

Environment

Use a suitable container. The fuel collected must be disposed of as specified in national and international laws and regulations.

© Scania CV AB 2026, Sweden

Exhaust gas aftertreatment

IMPORTANT!

Cleanliness is very important when working on the reductant circuit. Clean thoroughly around all parts to be dismantled to prevent dirt from entering the system.

When working on the exhaust gas aftertreatment management system, the reductant connections may only be lubricated with an aqueous soft soap solution or with distilled water with a 3% urea mixture. Any other types of lubricants may block and damage the components in the exhaust gas aftertreatment management system.

Reductant causes certain metals to corrode. Always rinse away reductant spillage on connections and other parts with lukewarm water to prevent corrosion. If reductant seeps into electrical connections or electrical cables, these must be renewed.

WARNING!

When the engine is running, the exhaust system parts can reach such high temperatures that there is a risk of personal injury. Make sure that the temperature has fallen to a suitable level before starting work.

WARNING!

Respiratory protective equipment/filter mask of the P3 type, eye protection and gloves should be used for any work where there is a risk of exposure to hazardous particles from the particulate filter. Safety clearance for unprotected people is 3 m.

Any particles must be removed with a vacuum cleaner to minimise exposure. The vacuum cleaner must be equipped with a HEPA filter that can filter out particles down to a particle size of 0.3 µm.

To avoid ingestion, do not eat, drink or smoke while work is in progress. Make sure you clean your hands after working on the particulate filter.

Environment

The oxidation catalytic converter, the particulate filter and the SCR catalytic converter contain precious metals and must be processed in compliance with local regulations.

© Scania CV AB 2026, Sweden

Electrical system

WARNING!

Switch off the engine and switch off the power by disconnecting the electrical cables to the battery. External power supplies to extra equipment in the engine must also be disconnected.

Always use Scania spare parts for the fuel and electrical systems. Scania spare parts are designed to minimise the risk of fire and explosion.

Electric welding

WARNING!

When carrying out welding work on and near the engine, disconnect the battery and alternator leads. Pull out the multi-pin connector for the engine control unit as well.

Connect the welding clamp close to the component to be welded. The welding clamp must not be connected to the engine, or so that the current can cross a bearing.

When welding is finished:

1. Connect the alternator and engine control unit cables.
2. Connect the batteries.

Batteries

WARNING!

The batteries contain highly corrosive sulphuric acid. Take care to protect your eyes, skin and clothes when charging or handling batteries. Wear protective gloves and eye protection.

If sulphuric acid comes into contact with your skin: Wash it off with soap and plenty of water. If it splashes in your eyes: Rinse immediately with plenty of water and seek medical attention.

Environment

Used batteries must be disposed of as specified in national and international laws and regulations.

A/C compressor

WARNING!

The A/C compressor on the engine can be adapted for the new refrigerant R1234yf. The refrigerant is flammable and can be ignited by hot engine components. Check the type of refrigerant in the vehicle and make sure that the engine has cooled down before starting work on the air conditioning.

Before starting

WARNING!

Ensure that all guards are in place before starting the engine. Ensure that no tools or other objects have been left on the engine.

The air filter must be fitted before starting the engine. Otherwise there is a risk of objects being sucked into the compressor impeller or of injury if you come into contact with the impeller.

Cybersecurity

IMPORTANT!

The machine manufacturer is responsible for ensuring that all engine management communication is protected against all forms of cyber attack.

The machine manufacturer is also responsible for ensuring the engine can be operated safely in all conditions, including the option of shutting off the engine in the event of disruption to communications with or without engine control.

© Scania CV AB 2026, Sweden

Engine data plate

The engine data plate indicates, in the form of a code, the engine type, its size and applications. It also indicates the engine type power range and the nominal engine speed. The engine's EU type approval for exhaust emissions is indicated under *Output*, where applicable.

The engine power is indicated on a plate located on the left-hand side of the flywheel housing. The engine serial number is stamped onto the top of the cylinder block at the front right.

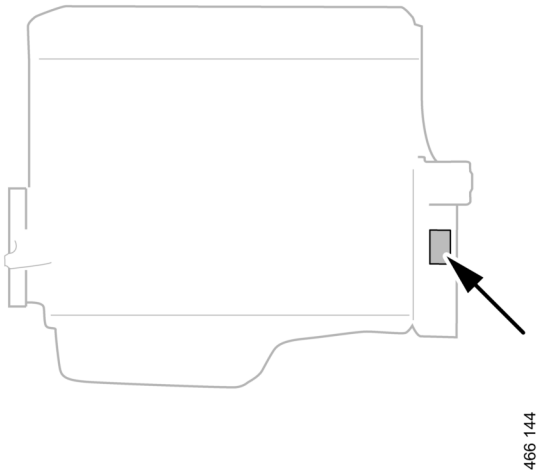

Example: DC13 501A	
DC	Turbocharged diesel engine with air-cooled charge air cooler.
13	Displacement in whole dm^3.
501	Performance and certification code. The code indicates, together with the application code, the normal gross engine output.
A	Code for application. A means for general industrial use.

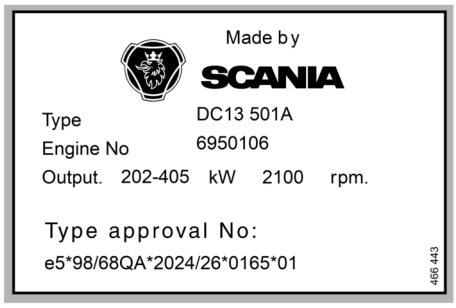

© Scania CV AB 2026, Sweden

Component identification

Engine

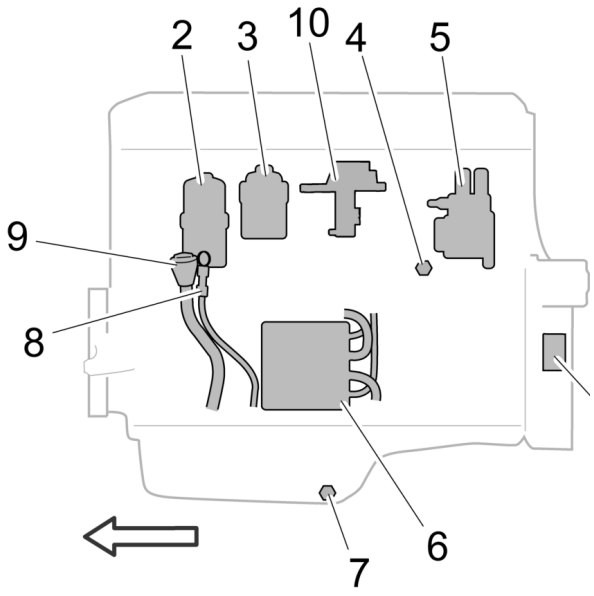

The illustration shows a normal version of a DC13 engine. The engine ordered may have different equipment.

1. Engine data plate
2. Oil filter
3. Fuel filter
4. Nipple for draining and filling coolant
5. High pressure pump
6. Engine control unit
7. Oil plug
8. Oil dipstick
9. Oil filler
10. Electric interface

© Scania CV AB 2026, Sweden

Exhaust gas aftertreatment

Overview

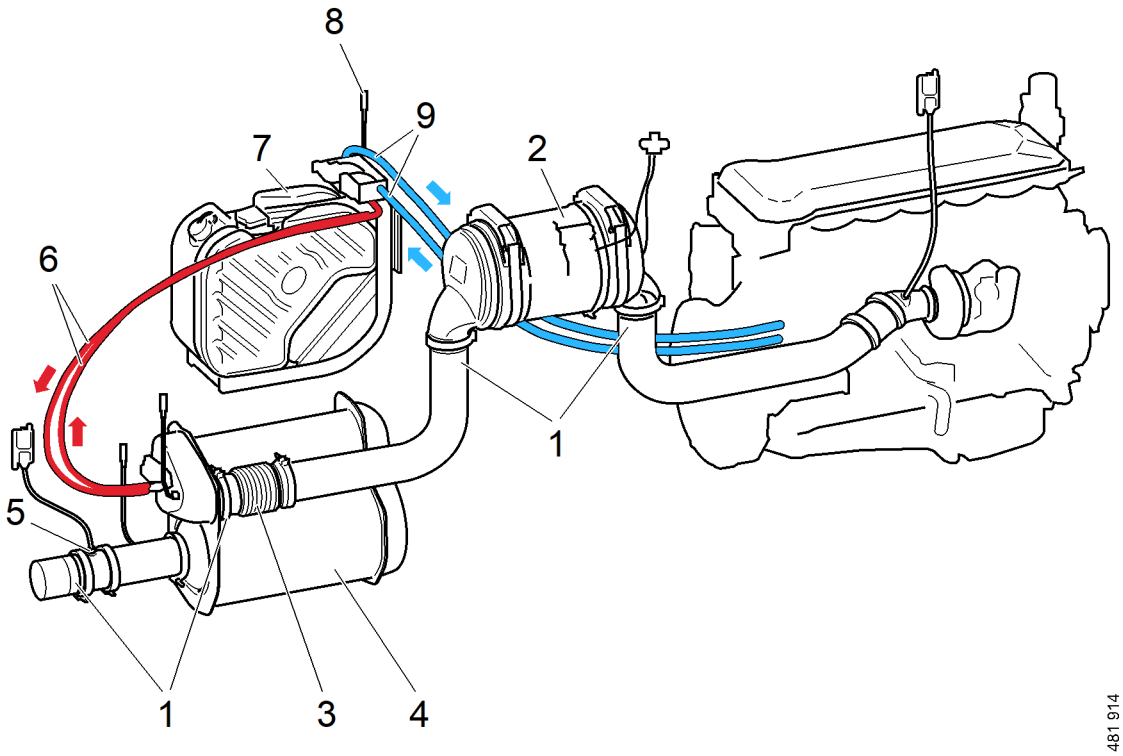

The illustration provides an overview of exhaust gas aftertreatment management system components.

1. NO_xsensors with control unit
2. Differential pressure sensor
3. Exhaust gas temperature sensor
4. Exhaust gas temperature sensor
5. Oxidation catalytic converter
6. Particulate filter
7. Exhaust gas temperature sensor
8. Reductant doser
9. NO_xsensors with control unit
10. SCR catalytic converter
11. Evaporator
12. Reductant return hose
13. Reductant pressure hose
14. Reductant tank
15. Coolant hose for tank and pump heating
16. Coolant hose, return from tank and pump heating

© Scania CV AB 2026, Sweden

Starting and running

Checks before first start

Before the engine is started for the first time, carry out the maintenance items listed under First start in the maintenance schedule. Check the following:

- Oil level.
- Coolant.
- Fuel level.
- Fluid level in batteries.
- Battery state of charge.
- Condition of the drive belt.
- Level in the reductant tank, if the engine is fitted with an SCR system.

See also Maintenance intervals.

IMPORTANT!

Running the engine without reductant in the reductant tank violates emissions legislation and will damage the SCR system.

Applies only to engines fitted with exhaust gas aftertreatment management systems designed for the following emission standards: EU Stage V, China IV, Korea Tier 5, and US Tier 4f.

Reductant tank

Reductant tanks come in 5 different sizes. The volumes indicated for each tank are filling volumes.

1. 38 litres (10 US gallons).
2. 60 litres (15.8 US gallons).
3. 45 litres (11.9 US gallons).
4. 63 litres (16.6 US gallons).
5. 70 litres (18.5 US gallons).

A filler filter with magnet is fitted in the reductant tank to prevent the reductant from becoming contaminated when filling. It is used when refuelling at a filling station. A filler filter without a magnet is also supplied for use when filling manually.

© Scania CV AB 2026, Sweden

Reductant pump

The reductant pump is equipped with electronic overflow protection.

When the reductant pump is new, the check valves may need to be slackened.

IMPORTANT!

Start the reductant pump immediately after the reductant tank has been filled for the first time.

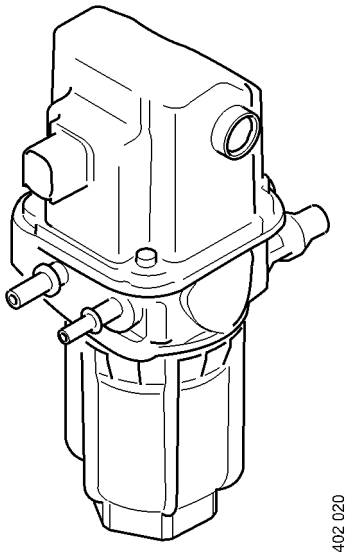

402 020

© Scania CV AB 2026, Sweden

Checks before running

Carry out daily maintenance as described in the maintenance schedule prior to operation. See Maintenance intervals.

Starting the engine

WARNING!

Never use starter gas or similar agents to help start the engine. This can cause an explosion in the intake manifold and possible injury.

Only start the engine in a well ventilated area. When the engine is run in an enclosed space, there must be effective devices to extract exhaust gases and crankcase gases.

IMPORTANT!

The starter motor must only be cranked twice for 30 seconds at a time. After that, it must rest for at least 5 minutes before the next attempt to start it.

For environmental reasons the Scania engine has been developed to be started with a low fuel feed. Using unnecessarily large amounts of fuel when starting the engine always results in emissions of unburnt fuel.

1. Open any fuel cock.
2. Disengage the engine.
3. If the engine has a battery master switch: Connect the power using the battery master switch.
4. Start the motor.

If the fuel tank has been run dry or if the engine has not been used for a long time, bleed the fuel system. See the section Venting the fuel system.

Starting at low temperatures and at high altitudes

Take the local environmental requirements into account. Use a fuel heater and engine heater to avoid starting problems and white smoke.

Scania recommends that an engine heater should be used if the engine will be used at temperatures below -10°C (14°F) or at an altitude of more than 2,000 metres.

A low engine speed and a moderate load on a cold engine limits white smoke, gives better combustion and warms up the engine more quickly than warming it up with no load.

Avoid running it longer than necessary at idling speed.

Sound from the engine

Micro-pulsations

Occurs with the ignition on. Most noticeable if the engine is not cranked. Sounds like a high-frequency buzzer.

Caused by a very short activation of injectors, which allows fuel to bypass the injectors without injecting fuel into the combustion chamber.

Used to reduce the fuel pressure when starting to ensure that the engine's starting behaviour is consistent.

Adapting an active fuel inlet metering valve (AIC)

Occurs when the active fuel inlet metering valve is being adapted. This mostly occurs with a new engine. After this, minor adaptation takes place continuously.

Short engine knock intervals are heard when adaptation takes place.

Belt transmission

When the belt transmission is new, it may make a squeaking noise when driving. This noise is normal and disappears after 50-100 hours of operation.

The noise does not affect the service life of the belt transmission.

Electric feed pump

Occurs with the ignition on. The sound is a low buzzing sound.

© Scania CV AB 2026, Sweden

Driving

Check instruments and warning lamps at regular intervals.

Engine speed range

The engine operating speed range is between low idling and the nominal engine speed. The nominal engine speed is indicated on the engine data plate. Low idling can be set between 500 and 975 rpm.

A slightly higher engine speed than the nominal engine speed may occur at low or negative load.

Driving at high altitude

When driving at high altitudes engine power is reduced automatically due to the lower oxygen content in the air. It is then not possible to run the engine at maximum power.

Note:

Driving at an altitude higher than 5,000 metres above sea level is only permitted if it has first been approved by Scania.

Change of rotational speed for single-speed engines

When changing the rotational speed of a single-speed engine, the engine must be stopped completely before the rotational speed is changed.

IMPORTANT!

The engine must not be driven at other rotational speeds than those approved by Scania.

Emission control

The system provides a warning if there are faults in the SCR system or if the level of reductant in the reductant tank is too low. In the case of some faults, for example if doser cooling is not working, the torque is reduced.

EMS malfunction warning

The machine interface shows indications for faults in the engine management system.

A yellow warning lamp indicates that the operator should contact a workshop as soon as possible. It is activated in the event of emission-related faults and other faults which may need to be rectified.

Below are some examples of typical faults which illuminate the yellow warning lamp:

- Signal for sensor or actuator lost.
- Engine or exhaust gas aftertreatment system temperature close to hardware limitations.
- System battery voltage outside the normal range.
- Diagnostic fault code for e.g.:
  - NOx sensor
  - Pressure outside the reference range
  - Adaptation outside limit values

The red warning lamp indicates an emergency request for an immediate controlled shutdown due to a serious risk of personal injury or engine damage.

The operator should contact a workshop before starting the engine again.

Below are some examples of typical faults which illuminate the red warning lamp:

- Long-term loss of oil pressure.
- Internal EMS software failure.
- Battery voltage too high.
- Severe engine overspeed.
- Serious fuel system fault

© Scania CV AB 2026, Sweden

Reaction to low reductant level – US Tier 4f

Reductant level	Warning lamp	Torque reduction
20%	Constant light	
10%	Flashing	Torque is reduced by 1% per minute to 70 % of the highest torque.
0%	Flashing	Torque is reduced to 0% (low idling) within 2-10 minutes.

The engine resumes normal torque after reductant has been filled to a level of at least 20%.

Symbol for low reductant level.

© Scania CV AB 2026, Sweden

Reaction to low reductant level – EU Stage V/China IV/Korea Tier 5

Note:

Its behaviour and the symbol depend on the installation of the engine in the machine. The Scania recommendation will lead to the behaviour and symbol described here, but this may differ between different machines.

Symbol for low reductant level.

Reductant level	Warning lamp	Torque and speed control
10%	Constant light	-
2.5%	Flashing	Torque is reduced by 1% per minute to 75% of the highest torque.
0%	Flashing	Torque is reduced by 1% per minute to 50% of the highest torque. The engine speed is reduced to 60% of the nominal engine speed.

The engine resumes normal torque after reductant has been filled to a level of at least 10%.

© Scania CV AB 2026, Sweden

Reaction to fault in SCR system – Tier 4f

Time	Warning lamp	Torque reduction
Fault detected	Constant light	
After 30 minutes	Flashing	Torque is reduced by 1% per minute to 70 % of the highest torque.
After 4 hours	Flashing	Torque is reduced to 0% (low idling) within 2-10 minutes.

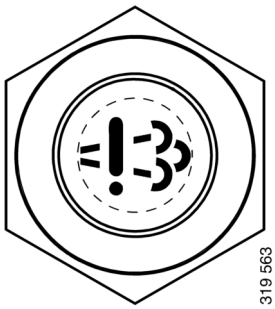

Symbol for fault in SCR system.

Once the fault has been remedied and the engine control unit has received an indication that it is working, torque returns to the normal level.

If a new fault occurs within 40 hours of operation since the first fault, the warning lamp will come on. After 30 minutes of operation, the warning lamp will flash rapidly and torque will be reduced to 0% (low idling) within 30 minutes.

IMPORTANT!

If the torque has been reduced to 0% (low idling), the control unit does not detect that the SCR system is functioning again. A service technician must then reset the system so that the torque returns to the normal level.

Note:

The torque reduction only applies to engines certified according to US Tier 4. Some emergency vehicles do not have torque reduction.

© Scania CV AB 2026, Sweden

Reaction to fault in the exhaust gas aftertreatment management system – EU Stage V/China IV/Korea Tier 5

Note:

The symbol and behaviour of the warning lamp depend on the installation of the engine in the machine. The Scania recommendation will lead to the behaviour and symbol described here, but this may differ between different machines.

Warning lamp	Torque and speed control
Constant light	None
Flashing	Torque is reduced by 1% per minute to 75% of the highest torque.
Flashing	Torque is reduced by 1% per minute to 50% of the highest torque. The engine speed is reduced to 60% of the nominal engine speed.

Once the fault has been remedied and the engine management system has received an indication that the exhaust gas aftertreatment system is operational, i.e. when the fault code has been acknowledged in SDP3, torque returns to the normal level.

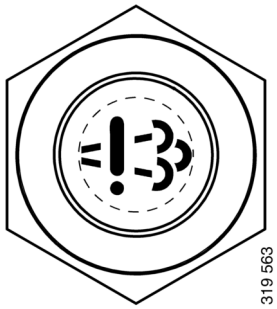

Symbol for faults in the exhaust gas aftertreatment system.

© Scania CV AB 2026, Sweden

Regeneration of the particulate filter

The particulate filter is regenerated, i.e. cleaned, automatically. If a certain amount of soot is accumulated, the engine enters a periodic and automatic program to reduce the amount of soot. The engine can be used without any impact on operation.

However, if the particulate filter becomes full, it must be regenerated manually. The engine cannot be used for approximately 40-70 minutes while manual regeneration is carried out. The *Particulate filter symbol* is used to indicate that the particulate filter is full and needs to be regenerated manually.

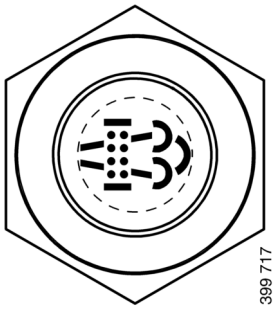

Symbol for particulate filter regeneration.

Note:

During manual regeneration, the engine speed can rise to 1,500 rpm for all-speed engines. For engines configured as single-speed, all regeneration occurs at the selected rotational speed.

WARNING!

The components in the exhaust system may become hot.

Make sure that there is no combustible material near the exhaust pipe.

IMPORTANT!

It is the operator's responsibility to ensure that the machine is in a safe location and safe condition when performing manual regeneration.

Examples of actions include:

- Applying the parking brake.

- Disengaging the generator set.

Note:

The symbol and behaviour of the warning lamp depend on the installation of the engine in the machine. The Scania recommendation will lead to the behaviour and symbol described here, but this may differ between different machines.

© Scania CV AB 2026, Sweden

Warning lamp	Description
Constant light	The particulate filter is starting to become full. Increase the load to improve automatic regeneration or regenerate the particulate filter manually.
Flashes slowly (½ Hz)	Carry out manual regeneration as soon as possible.
Flashes rapidly (2 Hz)	Yellow warning. The particulate filter is overfull (130-160% soot particles). Reduce the power to 70%. Manual regeneration cannot be carried out. Book a mechanic to clean the filter.
Flashes rapidly (2 Hz)	Red warning. More than 160% soot particles. Can no longer regenerate with SDP3, the torque reduction remains as above. Stop the machine and renew the particulate filter.

© Scania CV AB 2026, Sweden

Coolant temperature

IMPORTANT!

An excessive coolant temperature can cause engine damage.

Normal coolant temperature during operation is 90 to 95°C (194 to 203°F).

The alarm levels are set in the engine control unit. The default setting for the lowest and highest limit values for high coolant temperature are 95°C/203°F and 105°C/221°F respectively. The following function is standard as alarm for high coolant temperature:

- Alarm and torque reduction at the lowest limit value.

Depending on the engine configuration, the following alarm functions may also be available:

- Alarm only.
- Alarm and engine shutdown at the highest limit value.
- Alarm, torque reduction at the lowest limit value and engine shutdown at the highest limit value.
- Alarm and engine shutdown at the highest limit value with the possibility of engine shutdown override control.
- Alarm, torque reduction at the lowest limit value and engine shutdown at the highest limit value, with the possibility of engine shutdown override control.

If driven for extended periods under an extremely light load, the engine may have difficulty in maintaining the coolant temperature. At an increased load the coolant temperature rises to the normal value.

© Scania CV AB 2026, Sweden

Oil pressure

Normal oil pressure during operation is 3-6 bar (43.5-87 psi). The lowest permitted oil pressure when idling is 0.7 bar (10.2 psi).

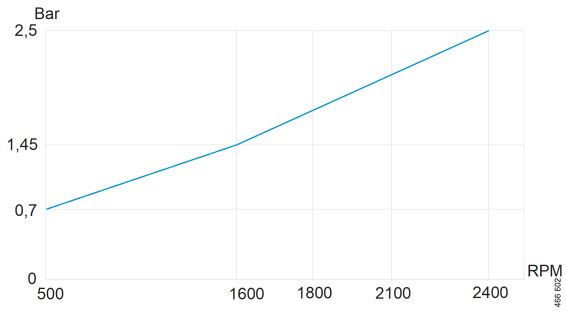

The engine management system issues an alarm at the following levels:

- At an engine speed below 500 rpm and an oil pressure below 0.7 bar (10.2 psi).
- At an engine speed above 1,600 rpm and an oil pressure below 1.45 bar (21 psi).
- At an engine speed above 2,400 rpm and an oil pressure below 2.5 bar (36.3 psi) for longer than 3 seconds.

The following function is standard as alarm for incorrect oil pressure:

- Alarm and torque reduction by 30%.

Depending on the engine configuration, the following alarm functions may also be available:

- Alarm only.
- Alarm and engine shutdown.
- Alarm and engine shutdown override control.

Note:

High oil pressure (above 6 bar/87 psi) is normal if the engine is cold when started.

Charging indicator lamp

If the lamp comes on during operation: Check and adjust the alternator drive belt according to the instructions in the section Checking the drive belt.

If the charging indicator lamp is still on, this could be due to an alternator fault or a fault in the electrical system.

© Scania CV AB 2026, Sweden

Water in fuel

IMPORTANT!

Water in the fuel can cause serious engine problems.

The engine is fitted with a sensor that detects the amount of water in the water-separating prefilter.

The following function is standard as an alarm when too much water has collected in the prefilter:

- Alarm and torque reduction by 30%.

Depending on the engine configuration, the following alarm functions may also be available:

- Alarm only.
- Alarm and engine shutdown.
- Alarm and engine shutdown override control.

Belt transmission

When the belt transmission is new, it may make a squeaking noise when driving. This noise is normal and disappears after 50-100 hours of operation. The noise does not affect the service life of the belt transmission.

Raised idling speed for engines with an SCR system

If the engine is run without load for an extended period of time, the SCR system needs to be heated by raising the idling speed. The function is called periodic hydrocarbon evaporation and is used to avoid damaging the SCR catalytic converter.

Periodic hydrocarbon evaporation functions differently depending on how the engine is fitted. A warning is output for all engines if the engine needs to be warmed up. The warning is output after approx. 8 hours if the engine is idling without load and the ambient temperature is 20°C (68°F). The time is reduced as the ambient temperature becomes colder. The warning is delivered more quickly at high idling speed.

For some engines, a request for automatic raising of the idling speed is also sent after the warning. If the request is confirmed, the idling speed is raised automatically. The function is active for 45 minutes or less and is deactivated automatically. If the request is not confirmed, the engine is switched off after approx. 45 minutes, if the engine has been configured with engine shutdown. Otherwise, a red warning lamp will come on.

Note:

During hydrocarbon evaporation, the engine speed can rise to 1,500 rpm for all-speed engines. For engines configured as single-speed, all hydrocarbon evaporation occurs at the selected rotational speed.

© Scania CV AB 2026, Sweden

Engine shutdown

IMPORTANT!

There is risk of post boiling and of damage to the turbocharger if the engine is switched off without cooling. The power must not be switched off before the engine has stopped.

If the engine is fitted with a battery master switch and an SCR system, the SCR system must run for a while after the engine has been switched off to allow it to cool down.

In extreme conditions, the SCR system may need up to 30 minutes to cool down the reductant doser.

During this period the power must not be cut using the battery master switch.

Note:

The battery voltage must remain on for around 20 seconds after the 15-voltage is switched off so that the control units can store the values and switch to sleep mode.

1. Run the engine without a load for a few minutes if it has been run continuously with a heavy load.
2. Switch off the engine.

Checks after running

WARNING!

Block the starting device when working on the engine. If the engine starts unexpectedly, there is a serious risk of injury.

There is always a risk of sustaining burns when an engine is hot. Particularly hot parts are branch pipes, turbochargers, oil sumps, and hot coolant and oil in pipes and hoses.

IMPORTANT!

Check the coolant level following the first start. Top up with coolant as necessary.

1. Check that the power supply has been cut.
2. Top up the fuel tank. Make sure that the filler cap and the area round the filler opening are clean to avoid contamination of the fuel.
3. If the engine is fitted with an SCR system: Fill the reductant tank. Make sure that the filler cap and the area round the filler opening are clean to avoid contamination of the reductant.
4. If there is a risk of freezing, the cooling system must contain enough glycol. See the section Risk of freezing.
5. If the temperature is below 0°C (32°F): Prepare for the next start by connecting the engine heater, if fitted.

© Scania CV AB 2026, Sweden

Transporting engines

IMPORTANT!

When transporting engines or machines, the exhaust outlet must be protected from water and debris. The exhaust gas aftertreatment may be damaged if there is water or debris intrusion.

Ensure that the transport protection is in place and remains there throughout the transport.

© Scania CV AB 2026, Sweden

Maintenance

The maintenance programme covers a number of points that are divided into the following sections:

- Lubrication system
- Air cleaner
- Cooling system
- Fuel system
- Other

WARNING!

Block the starting device when working on the engine. If the engine starts unexpectedly, there is a serious risk of injury.

There is always a risk of sustaining burns when an engine is hot. Particularly hot parts are branch pipes, turbochargers, oil sumps, and hot coolant and oil in pipes and hoses.

The maintenance programme includes the following:

- Maintenance R: One event when taken into service.
- Maintenance S: Minimum basic maintenance.
- Maintenance M: More extensive maintenance.
- Maintenance L: Includes nearly all maintenance items in the form.
- Maintenance XL: Includes all maintenance items in the form.

During a period, the sequence is S-M-S-L-S-M-S-L-S-M-S-XL.

IMPORTANT!

On delivery a Scania engine is optimised for its application. However, regular maintenance is necessary to:

- prevent unplanned stops
- extend the service life of the engine
- maximise the long-term emission performance of the engine
- give the best possible operating economy.

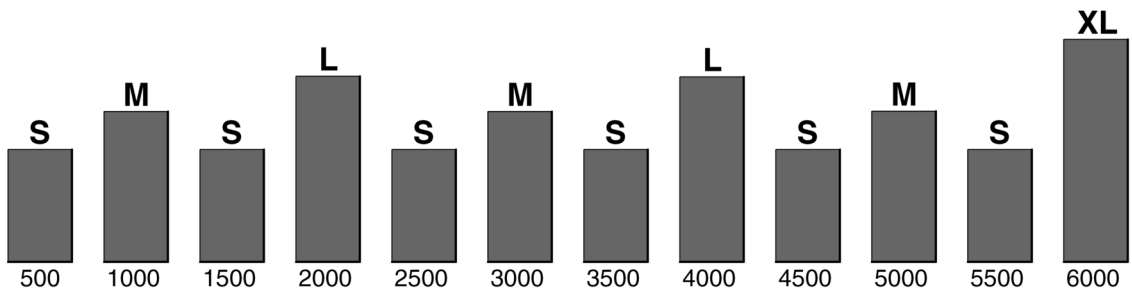

© Scania CV AB 2026, Sweden

Cleanliness

Scania's 13-litre engine with cylinder block generation 3 is one of the world's most efficient engines of its type. Lead-free frame and connecting rod bearings are used to withstand higher combustion pressure in order to provide these high levels of energy efficiency.

Important to know

- This type of bearing is particularly sensitive to foreign particles.
- This means that this generation of engines requires more thorough cleaning before workshop operations.
- To maintain Scania's renowned low downtime, it is important to follow these more stringent cleanliness requirements when carrying out repairs and maintenance.
- The extra cleaning is not very time-consuming in many cases.

What is cleanliness?

Cleanliness means that there must not be any dirt that can contaminate the systems on or around components.

This does not mean that components should be as clean as when they are new, but any dirt that could enter the system must be removed before a component is opened or removed.

Dirt warning

Cleanliness is particularly important when this warning symbol is displayed in work descriptions.

Dirt warning. Risk of engine breakdown

For Scania Maintenance, the presence of dirt poses a significant risk of breakdowns or operational disruptions.

When working on the engine, there is always a risk of dirt and foreign particles entering, which can lead to serious operational disruptions or bearing failures

Even very small particles can cause serious damage, so you should always follow our recommended methods and use our special tools.

All relevant methods contain information on how specific components should be handled regarding cleanliness, but they assume that the general recommendations in this section are followed.

Particularly sensitive areas

The entire engine is sensitive to foreign particles or dirt, but the particularly sensitive areas are:

- The entire fuel system.
- The lubricating system on the cleaned side of the oil filter.
- The engine intake.

Before working on the engine

Certain requirements must be met before work is carried out on the engine:

- If the engine needs to be opened for repair, it is recommended to lift it out and transport it to a workshop if possible, to ensure a clean working environment.
- If the engine needs to be opened for repair, it is recommended to lift it out and transport it to a workshop if possible, to ensure a clean working environment.
- The engine must be well cleaned in and around the surfaces where the work is to be carried out.
- The work must be carried out in a clean place.
- No other work that may cause dust or dirt to fall in and over the engine may be completed in the vicinity.
- Always wear clean lint- and dust-free clothes and single-use gloves.
- Use correct and clean shoes. If necessary, use shoe protectors
- Do not eat, drink or smoke while working on the engine.
- Clean your tools before use. Do not use worn or chrome-plated tools as particles or chrome may flake off.

Cleaning the engine

WARNING!

Beware of hot washing water. Wear eye protection, protective clothes and protective gloves.

© Scania CV AB 2026, Sweden

Environment

Dispose of the washing water in compliance with relevant national or local regulations.

Note:

The engine and engine compartment are cleaned using hot water. Use high-pressure jets with caution. Avoid spraying electrical components such as the starter motor, alternator, etc.

Before starting work on the vehicle, the components must be clean.

- A complete engine wash must be completed on extremely dirty engines.
- On engines with a normal amount of dirt, local cleaning must be completed as a minimum. This usually involves initial cleaning with a thick brush and an industrial vacuum cleaner, followed by swabbing on and around the component. If this is not deemed sufficient, the engine should be cleaned with degreasing agent and a hot water wash.
- If high pressure cleaning equipment is used, the following sensitive components must be handled with care.
  - Harness-to-component connector on A/C compressor
  - Harness-to-component connector on high pressure pump
  - Exhaust gas pressure sensor, T125
  - Fuel combined sensor, high pressure, T199
  - Fuel combined sensor, low pressure, T91
  - Electric throttle
  - Alternator
  - Combined sensor for coolant temperature and pressure, T225
  - Charge air temperature sensor, T121
  - Charge air pressure sensor, T122
  - Engine control unit, EMS
  - Oil level sensor, T110
  - Turbo speed sensor, T120
  - Rotational speed sensor, T75

Maintenance and repair

WARNING!

Particles can easily enter the engine and cause severe damage.

Therefore, whenever possible, ensure that all inspections and maintenance are carried out in a clean and controlled environment.

If it is not possible to move the machine to a protected environment, take additional safety precautions to minimise the risk of particles entering the engine.

Use clean protective equipment and aim to create the cleanest possible working environment. This is particularly important in environments and workplaces where dust and dirt are prevalent.

IMPORTANT!

Contamination will shorten the service life of the engine significantly.

Increased risks when opening the engine:

- When carrying out repairs, one of the greatest risks is particles becoming dislodged during the dismantling and fitting of the connecting rods. Take extra care.
- If a casing or cover is to be removed, always make sure that the area around and above the sealing surfaces has been cleaned and that the casing or cover has been cleaned. If this is not done, there is a risk that loose dirt will fall off when the cover or casing is lifted off.
- Make sure that, for example, the cylinder head gasket was removed from the cylinder head immediately after dismantling started. A gasket which comes loose when it is still under tension can cause dirt to be thrown down into the oil ducts. Take extra care if a gasket or gasket material needs to be cut loose, never poke a tool in far enough for dirt to brought into any oil ducts.
- Immediately plug exposed oil ducts
- Use *2 654 580 Protection plug kit* to immediately plug exposed parts of the fuel system.
- Openings on the engine that arise due to component removal must be covered with *588 879 Lint free cloth*, e.g., when removing the high pressure pump or removing the rocker cover.
- When taking long breaks from the work, we recommend, for example, covering the valve mechanism with the carefully cleaned valve cover.

© Scania CV AB 2026, Sweden

Place removed components on a thoroughly cleaned, dust-free surface. Scania recommends *2 403 296 Stainless steel worktop*. Cover the components with *588 879 Lint free cloth* or insert *2 541 586 Plastic bag*.

New components

New components must not be removed from their original packaging until immediately before use.

© Scania CV AB 2026, Sweden

Engines with few hours of operation

IMPORTANT!

On engines with few hours of operation, maintenance must be carried out annually or every 5 years.

Stand-by generator sets and similar items that are not used regularly should be test run and checked in accordance with the manufacturer's instructions.

The following maintenance items must be carried out once the engine has been warmed up to operating temperature.

1. Checking the oil level.
2. Checking the coolant level.
3. Checking the vacuum indicator.
4. Checking the fuel level.
5. Checking for engine leakage.

© Scania CV AB 2026, Sweden

Maintenance intervals

	Daily	First time at		Interval (hours)				Minimum	
		first start	500	500	1,000	2,000	6,000	annu-ally	every 5 years
			R	S	M	L	XL		
Lubrication system									
Checking the oil level	*X*	*X*							
Changing the oil			*X*	*(X)*[1]	*X*	*X*	*X*	*X*	
Renewing the oil filter			*X*	*(X)*[2]	*X*	*X*	*X*	*X*	
Air cleaner									
Reading the vacuum indicator	*X*		*X*	*X*	*X*	*X*	*X*		
Renewing the filter element[3]						*X*	*X*		*X*
Renewing the safety cartridge[4]						*X*	*X*		*X*
Cooling system									
Checking the coolant level	*X*	*X*	*X*	*X*	*X*	*X*	*X*		
Checking the coolant's anti-freeze and corrosion protection		*X*				*X*	*X*	*X*	
Changing the coolant and cleaning the cooling system							*X*		*X*
Fuel system									
Checking the fuel level	*X*	*X*							
Renewing the fuel filter					*X*	*X*	*X*		*X*
Fuel tank venting filter						*X*		*(X)*[5]	
Other									
Checking the drive belt		*X*			*X*	*X*	*X*	*X*	
Checking for leakage	*X*			*X*	*X*	*X*	*X*		
Checking and adjusting the valve clearance						*X*	*X*		
Renewing the reductant filter						*X*	*X*	*X*	
Cleaning the reductant tank filler filter				*X*	*X*	*X*	*X*		
Checking and cleaning the reductant tank venting			*X*	*X*	X	*X*	*X*		
Renewing the reductant tank plastic/brass venting filter							*X*		*X*
Checking/renewing the particulate filter	***4,500 hours***[6]								

1. The change interval depends on the average load and type of engine oil. See the "Oil change intervals" section.
2. The change interval depends on the average load and type of engine oil. See the "Oil change intervals" section.
3. Fixed intervals do not apply in extra dusty environments. Monitor the filter continuously. The indicator shows when the filter should be cleaned or renewed.
4. Fixed intervals do not apply in extra dusty environments. Monitor the filter continuously. The indicator shows when the filter should be cleaned or renewed.

© Scania CV AB 2026, Sweden

5. Applies every other year.
6. The change interval very much depends on the average load and application type. See the section Particulate filter maintenance intervals.

© Scania CV AB 2026, Sweden

Oil change intervals

IMPORTANT!

For all types of uses, it is recommended to use oil grade LDF-5, viscosity 5W-20.

This oil grade can be used in all ambient temperatures. Oil grade LDF-5 also provides a long interval between oil changes.

Note:

The values in the table below apply when oil has been topped up to max. on the oil dipstick.

Oil volume for oil sump with deep front (Oil volume during oil change: 38 litres).			
Fuel consumption litres/hour	<31	<36	>36
Oil grade: LDF-5	1,000 h	750 h	500 h
Other approved oil grade	750 h	500 h	400 h

Plastic oil sump with deep front (Oil volume during oil change: 43 litres).			
Fuel consumption litres/hour	<34	<38	>38
Oil grade: LDF-5	1,000 h	750 h	500 h
Other approved oil grade	750 h	500 h	400 h

Shallow oil sump (Oil volume at oil change: 48 litres).			
Fuel consumption litres/hour	<36	<40	>40
Oil grade: LDF-5	1,000 h	750 h	500 h
Other approved oil grade	750 h	500 h	400 h

Deep oil sump (Oil volume during oil change: 64 litres).			
Fuel consumption litres/hour	<41	<46	>46
Oil grade: LDF-5	1,000 h	750 h	500 h
Other approved oil grade	750 h	500 h	400 h

Extra deep oil sump (Oil volume when changing oil: 80 litres). Not available for all applications.				
Fuel consumption litres/hour	<40	40-50	50-72	>72
Oil grade: LDF-5	1,500 h	1,000 h	750 h	500 h
Other approved oil grade	1,000 h	750 h	500 h	400 h

© Scania CV AB 2026, Sweden

Particulate filter maintenance intervals

IMPORTANT!

Scania recommends using Scania LDF-5 engine oil. The graph can only be used if this requirement is satisfied.

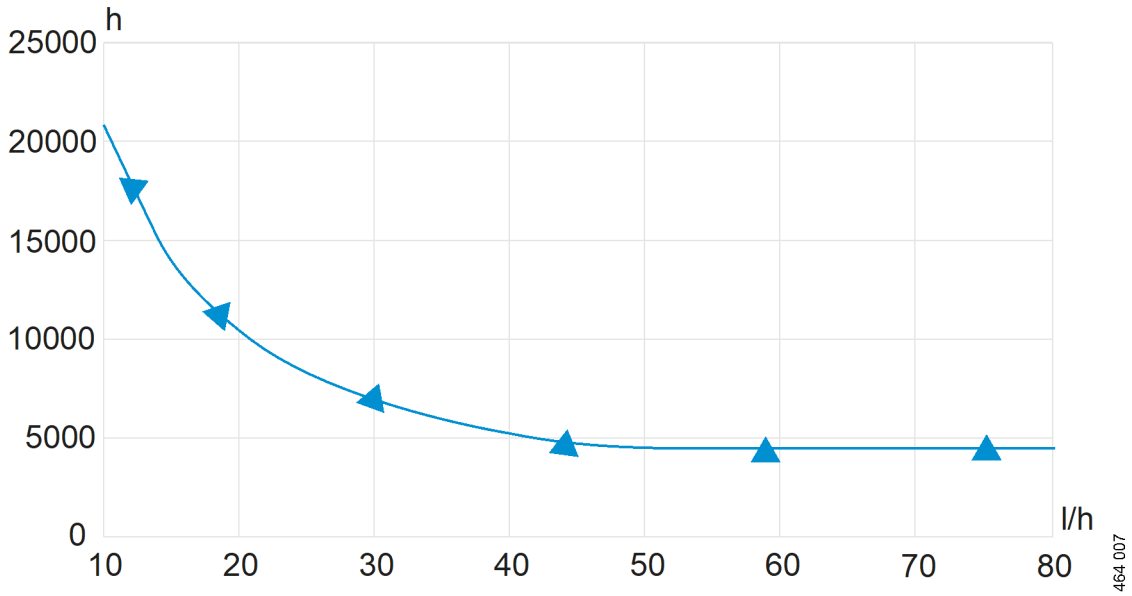

The graphs in the diagram show calculated driving time before particulate filter renewal.

Note:

The Y axis shows the driving time and the X axis shows the average fuel consumption.

© Scania CV AB 2026, Sweden

Lubrication system

Oil grade

Scania LDF stands for the Scania Long Drain Field test standard. Scania LDF oils have been carefully selected after extensive testing. The approval is only granted to the highest grade engine oils available on the market.

Recommended engine oils: Scania LDF and Scania E7 oils.

IMPORTANT!

Regarding particulate filters, the information in this document is not valid if an engine oil other than Scania LDF-5 is used.

Particulate filter	Oil grade
No	Scania LDF-3 ACEA E4, E7 API CI-4
Yes	Scania LDF-5, LDF-4 ACEA E6, ACEA E8, ACEA E11 API CK-4/FA-4 with ash content < 1%

For fuels with a high sulphur content, the Total Base Number (TBN) must be at least 12.

© Scania CV AB 2026, Sweden

If Scania LDF-5 is not used, the oil must be of a viscosity class suitable for the outdoor temperature in the region where the engine is used.

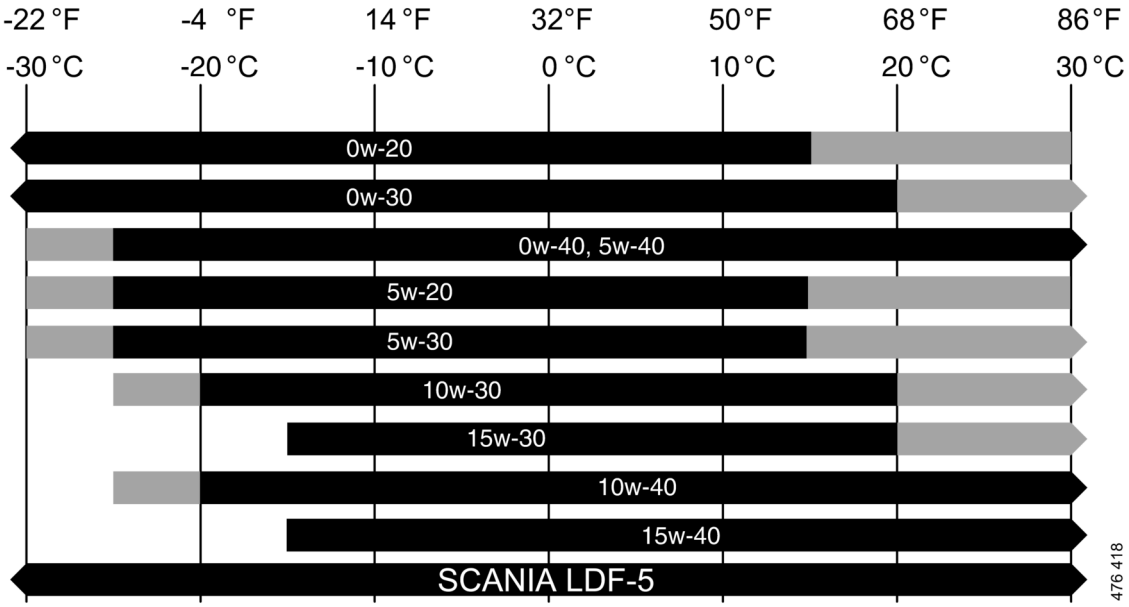

The illustration describes which ambient temperature in °C the viscosity class can handle for Scania-approved and market-approved oil grades.

Note that the Scania-approved oil grades have a greater temperature range than market approved oil grades.

352 436 = *The temperature range which the market-approved oil grades, for example ACEA Exx and API Cxx, can handle.*

352 437 = *The temperature range that the Scania-approved oil grades, for example the Scania LDF oils and Scania Low Ash, can handle exceeding that which the market-approved oil grades can handle.*

© Scania CV AB 2026, Sweden

Filled engine oil grade label

When changing the oil it is important to use the correct engine oil grade. The oil filler cover must be clearly marked with a label showing the filled oil grade. However, there are only labels for oils from Scania and oil grade ACEA E9.

Stick on a new label if the oil type or oil grade is changed in favour of any of the oil types above. Replace the label if it disappears. Oil filler label in rocker cover.

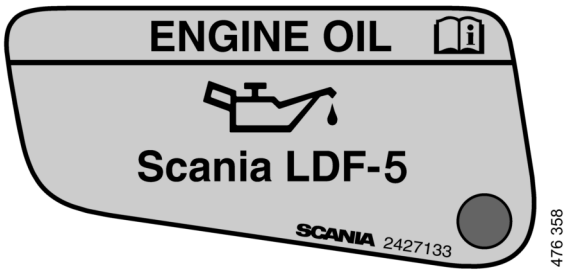

Oil filler label in rocker cover.

© Scania CV AB 2026, Sweden

Oil analysis

To be able to extend the oil change intervals using an oil analysis, Scania LDF-5 oils must be used.

The following requirements must remain satisfied when the oil is changed:

- Viscosity at 100°C (212°F): max. ± 20% of the original value of the fresh oil.
- TBN (in accordance with ASTM D4739): > 3.5.
- TBN (in accordance with ASTM D4739): > TAN (in accordance with ASTM D664).
- Oil oxidation (in accordance with DIN 51453) < 15

Such analysis measures the oil's total base number, TBN (Total Base Number), total acidic number, TAN (Total Acid Number), fuel dilution, water content, viscosity and the quantity of particles in the oil.

The result of a series of analyses is used as the basis for establishing a suitable oil change interval.

If the conditions are changed, a new oil analysis programme must be carried out to establish new oil change intervals. Work out the new oil change interval in consultation with the engine workshop.

REQUIREMENT!

Only Scania LDF-5 oils may be used in conjunction with oil analysis and a possible extended oil change interval.

Depending on the market, the warranty conditions may also change if the oil change intervals differ from the recommended Scania timetable.

© Scania CV AB 2026, Sweden

Checking the oil level

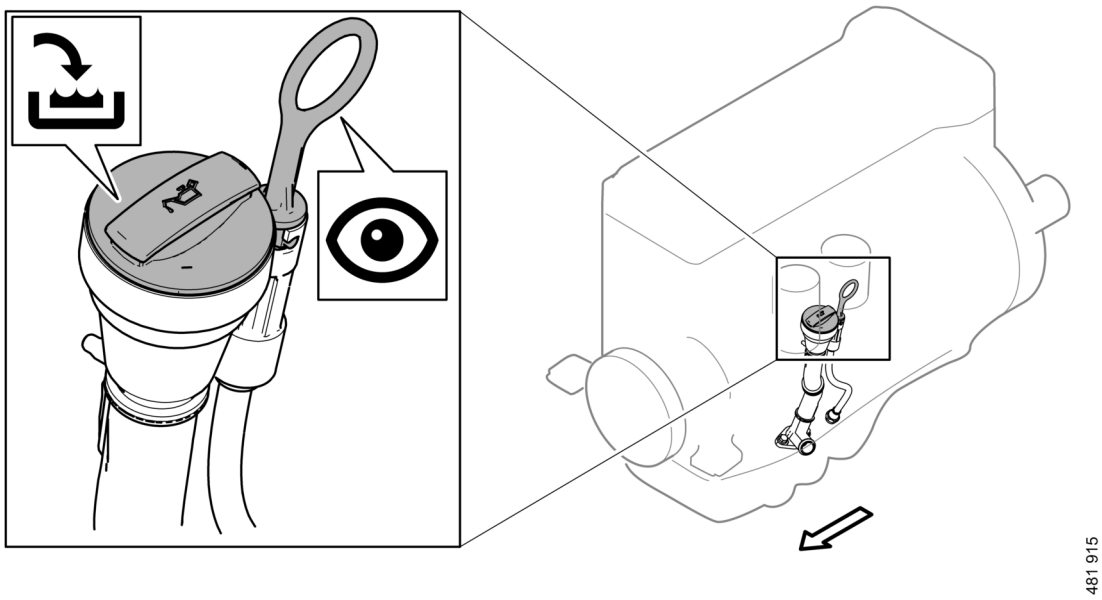

REQUIREMENT!

Leave the engine off for at least 7 minutes before you check the oil level.

IMPORTANT!

Oil filling is a risky procedure during which dirt can get into the engine's lubrication system.

It is important always to ensure that the oil dipstick, oil dipstick tube, oil filler cap and oil filler tube have been cleaned before changing the oil.

Oil filling must not be carried out except through the intended connection and never through the filter housing after the filter has been removed.

1. Pull out the oil dipstick and check the oil level. The correct level is between the minimum and maximum marks on the oil dipstick.
2. Top up with more oil via the oil filler if the oil level is at or below the minimum mark.

For information on the correct oil grade, see the section Oil grade.

© Scania CV AB 2026, Sweden

Changing the oil

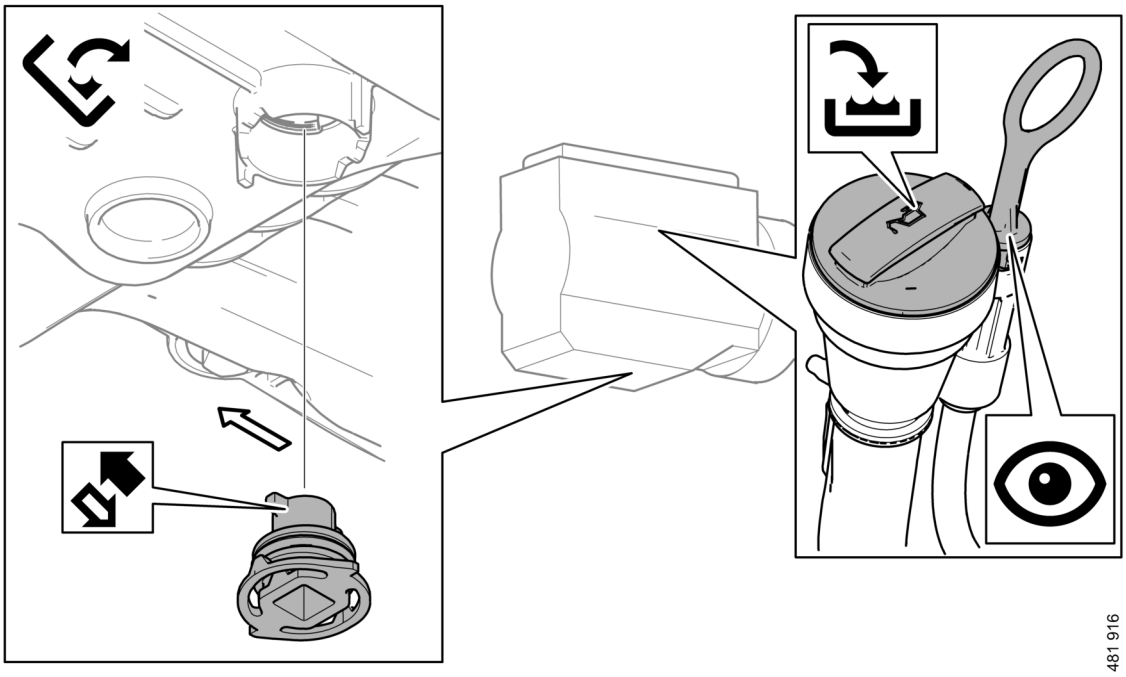

Tool

Designation	Illustration
588 879 Lint free cloth	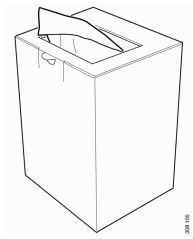

Tightening torque	
Oil plug, aluminium oil sump	60 Nm (44.25 lb/ft)

Information on cleanliness requirements

Cleanliness has always been important during maintenance of engines. With new engines with lead-free bearings, cleanliness has become even more critical. The smallest particle entering the lubrication system can cause serious damage.

© Scania CV AB 2026, Sweden

Procedure

WARNING!

Hot oil can cause burns and skin irritation. Use protective gloves and eye protection when renewing hot oil. Make sure that there is no pressure in the lubrication system before changing the oil. The oil filler cover must always be in place when starting and running the engine to prevent oil being ejected.

WARNING!

Do not loosen the oil filter cover before draining the oil. Undo the oil filler cover instead.

When the oil is drained, a vacuum is formed in the lubrication system. If the filter cover is detached, vacuum in dirty environments can lead to particles being sucked into the oil ducts.

IMPORTANT!

Oil filling is a risky procedure during which dirt can get into the engine's lubrication system.

It is important always to ensure that the oil dipstick, oil dipstick tube, oil filler cap and oil filler tube have been cleaned before changing the oil.

Oil filling must not be carried out except through the intended connection and never through the filter housing after the filter has been removed.

Note:

Change the oil more often if the engine is operated in particularly demanding conditions, e.g. in a dusty environment.

Renew the oil filter when changing the oil.

Remember always to clean the oil filler nozzle before refilling.

Environment

Use a suitable container. Used oil must be disposed of as specified in national and international laws and regulations.

1. Remove the oil filter (done so that the filter housing can be drained).
2. Unscrew the oil plug and drain the oil when the engine is hot. In certain engine types the oil is pumped out by means of a bilge pump.

   If the engine is drained via the valve, the oil should be hot. Alternatively, use a pump. This is so that draining occurs more quickly.
3. Fit the new oil filter.
4. Check that there is a gasket on the new oil plug.
5. Fit the new oil plug.

   For plastic oil sumps: oil the plug with fresh oil, fit the plug and tighten the plug 90°.

   Tightening torque Drain plug, aluminium oil sump, 60 Nm.
6. Fill with the amount of oil specified for the oil sump.
7. Wait at least 7 minutes.
8. Check the level on the oil dipstick.

© Scania CV AB 2026, Sweden

Oil volume

Maximum permitted angles of inclination during operation are 35° in all directions.

Oil sump	Oil volume
Oil sump with deep front. 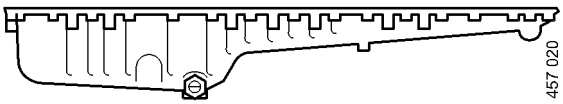	*When changing oil, 38 litres*
Plastic oil sump with deep front. 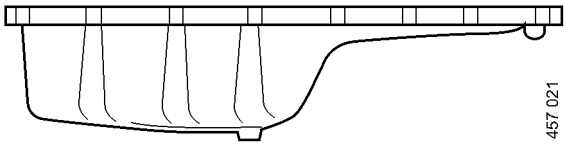	*When changing oil, 43 litres*
Shallow oil sump. 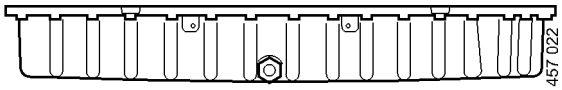	*When changing oil, 48 litres*
Deep oil sump. 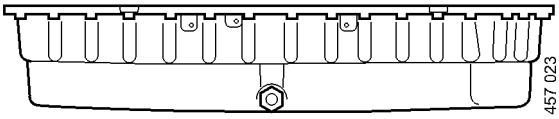	*When changing oil, 64 litres*
Extra deep oil sump. 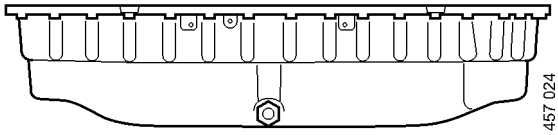	*When changing oil, 80 litres*

© Scania CV AB 2026, Sweden

Renewing the oil filter

Renewal, cartridge filter

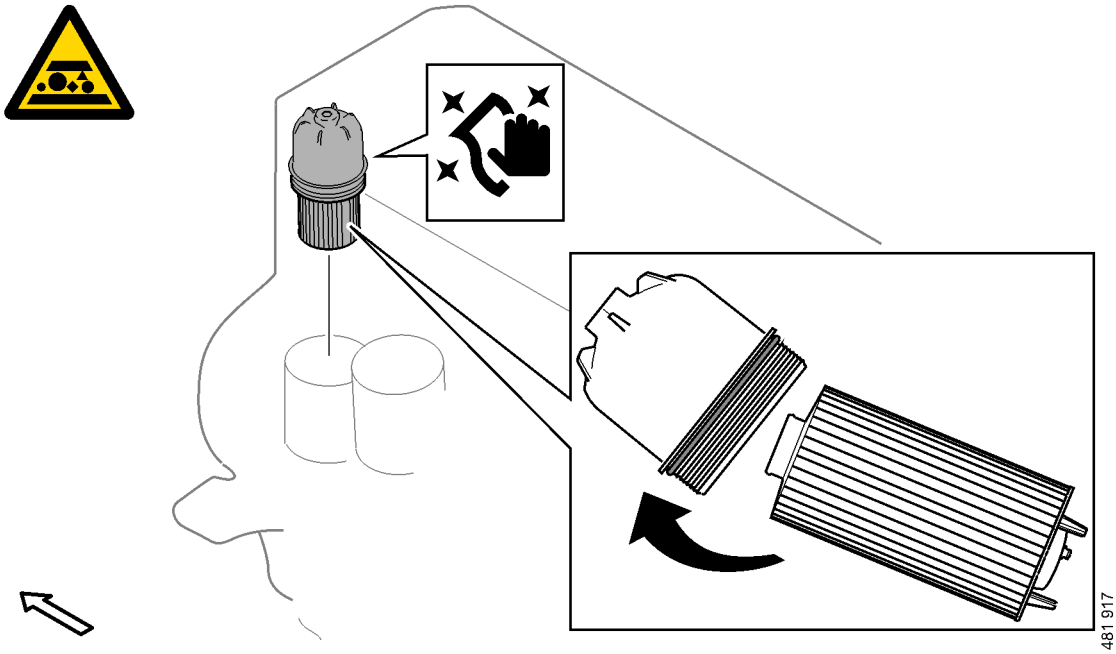

Tool

Designation	Illustration
36 mm, Socket, 6-sided, 1/2"	
588 879 Lint free cloth	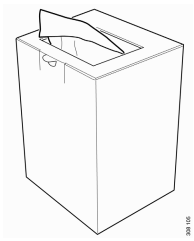

WARNING!

This working method exposes oil ducts on the clean side of the lubricating oil filter. Engines with lead-free bearings are particularly sensitive to dirt.

© Scania CV AB 2026, Sweden

There is a high risk of bearing seizure if foreign particles reach the lead-free frame or crankshaft bearings.

WARNING!

Beware of hot oil. Wear protective gloves and eye protection.

WARNING!

Oil must only be refilled through the intended connection and never through the filter housing after the filter has been removed.

IMPORTANT!

The oil filter must not be exposed before fitting.

IMPORTANT!

Only use original Scania filters as the wrong filter can cause damage to the filter and the centre tube.

Renew the oil filter according to Scania's maintenance instructions.

© Scania CV AB 2026, Sweden

Procedure

1. Read the instructions in the section Cleanliness. If a high-pressure washer is not available, the specific areas you will be working on must be cleaned locally.
2. Working on the components will release dirt onto your work surface. Clean the cover and the upper part of the oil filter housing before removing it.

   Brush off any loose dirt and collect with an industrial vacuum cleaner. Then clean with aqueous soft soap solution and dry with a lint free cloth.

IMPORTANT!

Remember to clean hidden areas of the parts, as even the smallest particles can cause issues.

Note:

Do not use an adjustable spanner or other open tool, as there is a risk of damaging the filter cover.

3. Unscrew the filter cover. Use *588 475, 36 mm, Socket, hexagon, 1/2"*.
4. Prepare a plastic bag and place the oil filter inside to prevent spillage.
5. Lift out the filter housing cover together with the filter.

   The filter housing will drain automatically once the filter has been removed.
6. Detach the oil filter from the cover. Remove the old filter by carefully loosening the filter from the cover or by gently tapping it against a hard surface. Remember that there will be oil splashes.
7. Protect the oil filtering system by covering the open reservoir with a lint free cloth.

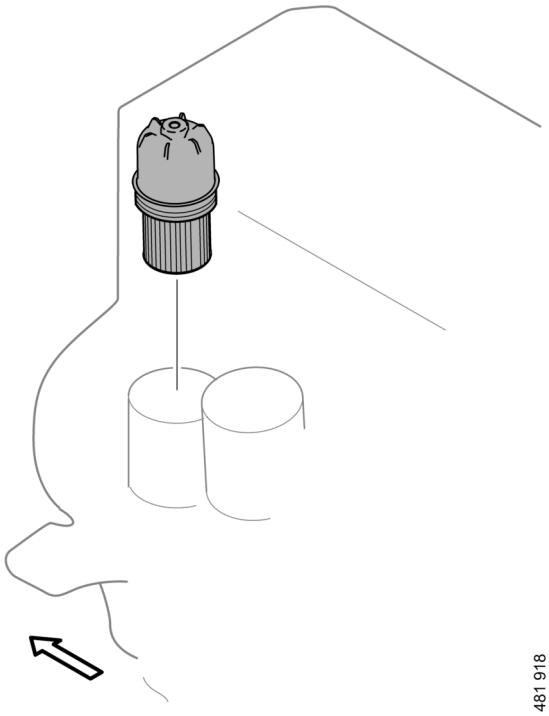

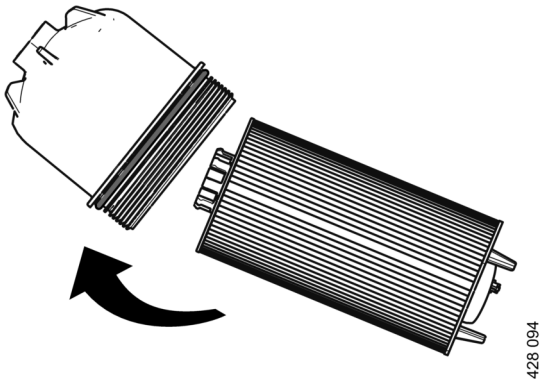

© Scania CV AB 2026, Sweden

Fitting

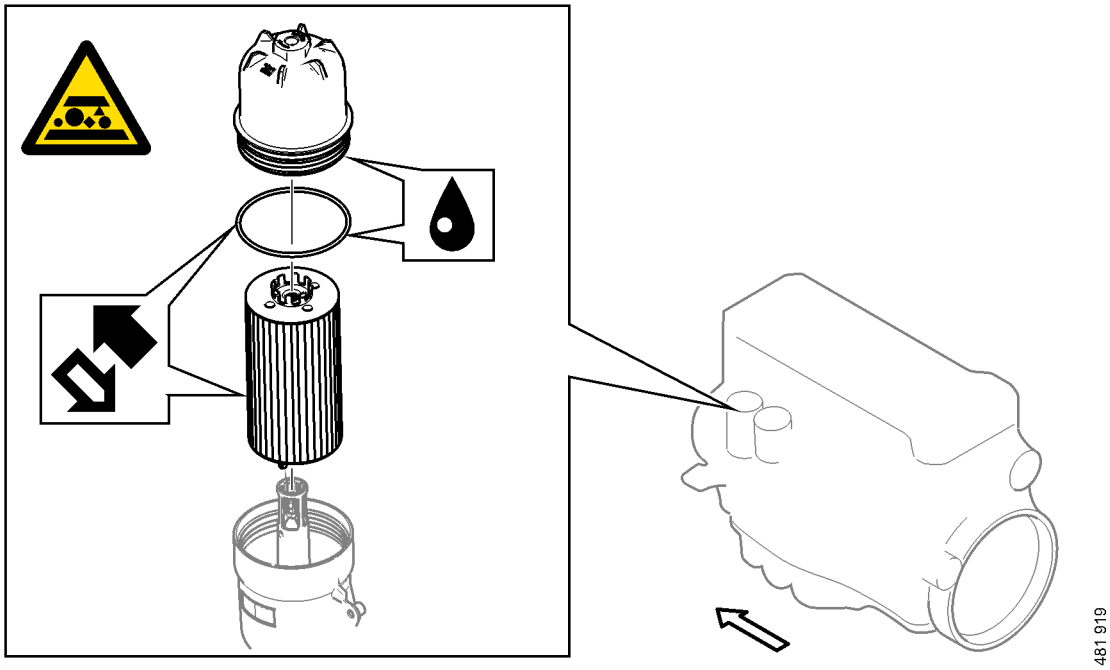

Tightening torque	
Oil filter, cover	35 Nm (25.81 lb/ft)

1. Fit a new O-ring on the cover and lubricate both the cover threads and the O-ring with the engine oil.

IMPORTANT!

Only use original Scania filters as the wrong filter can cause damage to the filter and the centre tube. Renew the oil filter according to Scania's maintenance instructions.

2. Press a new filter into the snap fastener on the cover.
3. Fit the filter and the cover. Tighten to 35 Nm.
4. Start the engine and check for leakage.
5. Check the oil level and fill as necessary.

WARNING!

Oil must only be refilled through the intended connection and never through the filter housing after the filter has been removed.

© Scania CV AB 2026, Sweden

Renewal, spin-on filter

Tool

Designation	Illustration
588 365 Oil filter pliers, 92-111 mm	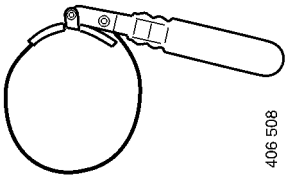 406 508
588 994 Oil filter wrench	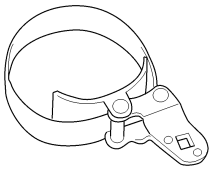 332 946

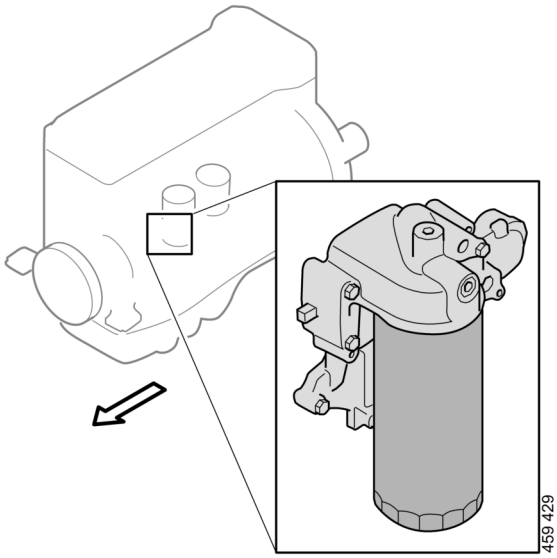

444 467

Dirt warning. Risk of engine breakdown

Procedure

IMPORTANT!

Only use original Scania filters as the wrong filter can cause damage to the filter and the centre tube.

Renew the oil filter according to Scania's maintenance instructions.

WARNING!

Beware of hot oil. Wear protective gloves and eye protection.

1. Read the instructions in the section Cleanliness. If a high-pressure washer is not available, the specific areas you will be working on must be cleaned locally.
2. Working on the components will release dirt onto your work surface. Clean the filter and upper part of the oil filter housing before removal.

   Brush off any loose dirt and collect with an industrial vacuum cleaner. Then clean with aqueous soft soap solution and dry with a lint free cloth.
3. Remove the oil filter. Use *588 994 Oil filter wrench* together with a ratchet spanner and extension bar. If there is space, tool *588 365 Oil filter pliers*, 92-111 mm can also be used.
4. Oil the rubber seal on the new filter.

© Scania CV AB 2026, Sweden

5. Tighten the filter by hand. Never use tools. The filter could sustain damage, obstructing oil circulation. Oil the rubber seal on the new oil filter.
6. Start the engine and check for leakage.
7. Check the oil level and fill as necessary.

© Scania CV AB 2026, Sweden

Air cleaner

WARNING!

Never start the engine without the air filter in position. Without the air filter, there is a risk of dirt being sucked into the engine.

The engine turbocharger will continue to rotate and take in air for a time, even after the engine has stopped. Therefore, wait for a few minutes before opening the air cleaner.

IMPORTANT!

Renew the filter element before the maintenance interval if the vacuum indicator shows red or emits a signal.

The filter element must not be cleaned in water or be blown clean with compressed air. There is always a risk that the filter element will be damaged when it is cleaned.

© Scania CV AB 2026, Sweden

Reading the vacuum indicator

Mechanical vacuum indicator

If the mechanical vacuum indicator's red plunger is fully visible, renew the air cleaner filter element in accordance with the following section.

Electric vacuum indicator

The engine may also be fitted with an electric vacuum indicator. It is connected to the machine interface and indicates with a warning lamp or another signal when the air cleaner filter element needs to be renewed. Renew the air cleaner filter element as per the following section.

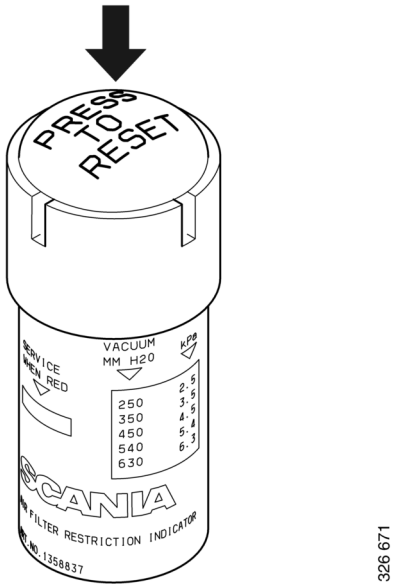

Mechanical vacuum indicator with reset button.

© Scania CV AB 2026, Sweden

Renewing the air cleaner filter element and safety cartridge

1. Remove the cover from the air cleaner.
2. Renew the filter element.
3. If the air cleaner has a safety cartridge: Remove the safety cartridge and fit a new one.
4. Insert a torch into the filter element and check that the filter paper is free of holes and cracks.
5. Renew the O-ring if it is damaged or hard.
6. Assemble the air cleaner.
7. Ensure that the O-ring is not outside the edges.
8. If the engine is fitted with a mechanical vacuum indicator, reset the vacuum indicator by pressing the button.
9. An electric vacuum indicator is reset automatically after renewing the filter.

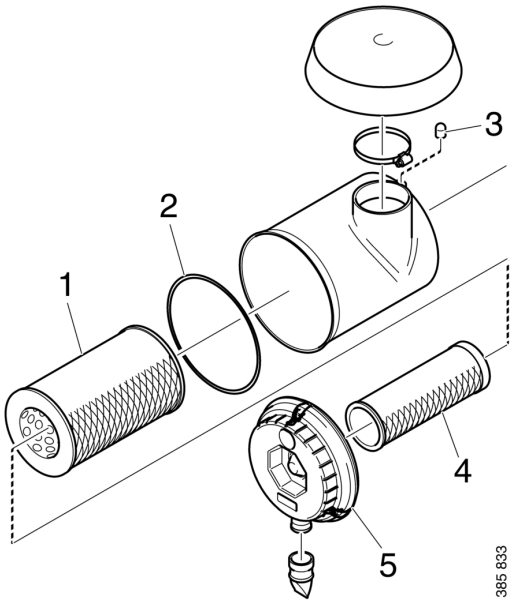

Air cleaner with safety cartridge:

1. *Filter element*
2. *O-ring*
3. *Vacuum indicator*
4. *Safety cartridge*
5. *Cover*

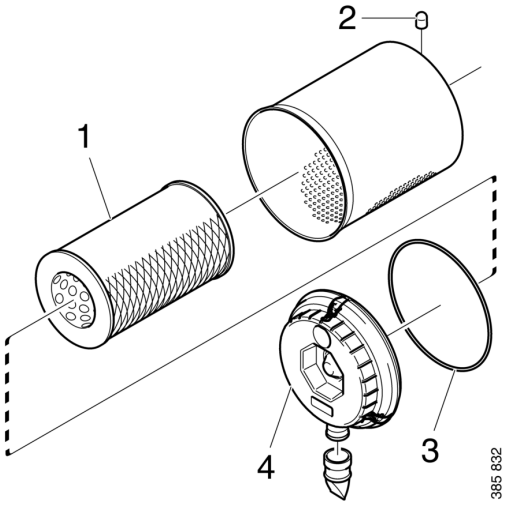

Air cleaner without safety cartridge:

1. *Filter element*
2. *Vacuum indicator*
3. *O-ring*
4. *Cover*

© Scania CV AB 2026, Sweden

Cooling system

Coolant

IMPORTANT!

Only the product Scania coolant, or other products tested as antifreeze and corrosion protection for Scania, may be used in Scania engines.

Products that do not satisfy the requirements for use in a Scania engine may result in faults in and damage to the cooling system. This may lead to the invalidation of Scania's warranty for faults and damage caused by the use of unsuitable coolant.

Scania Ready Mix coolant is a pre-mixed coolant consisting of water, antifreeze (ethylene glycol) and corrosion protection.

Note:

The coolant should be changed when the cooling system is cleaned: every 6,000 hours or at least every five years. See Changing the coolant and cleaning the cooling system.

The coolant recommended by Scania is a mixture of water with antifreeze (ethylene glycol) and corrosion protection. The coolant has several properties which are important for the function of the cooling system:

- Corrosion protection
- Antifreeze
- Increases the boiling point

The coolant should always contain 35-55 per cent by volume of antifreeze and corrosion protection so that the coolant properties ensure that the coolant works correctly.

Note:

Too high a dose of antifreeze and corrosion protection will increase the amount of sludge and blockages accumulating in the radiator. Too low a concentration can lead to corrosion of the cooling system and ice formation at low temperatures.

Hot climates

In order to retain the corrosion protection and the higher boiling point, it is essential to use coolant consisting of water mixed with antifreeze and corrosion protection (ethylene glycol). This also applies in countries where the temperature never drops below 0°C (32°F).

Antifreeze and corrosion protection

The antifreeze and corrosion protection used in Scania engines should be of the antifreeze (ethylene glycol) and corrosion protection type.

Water

Use only pure fresh water that is free from particles, sludge and other impurities. If there is uncertainty about the quality of the water, Scania recommends use of Scania ready-mixed coolants. See the section Recommended Scania products.

Recommended Scania products

Scania Ready Mix 50/50

Scania Ready Mix 50/50 is a ready-mixed coolant containing 50% antifreeze (ethylene glycol) and corrosion protection and 50% water. It should be used in cold countries where there is a risk of freezing in the cooling system.

Part no.	Volume litres	Volume US gallons
1 921 955	5	1.3
1 921 956	20	5.3
1 921 957	210	55
1 896 695	1,000	264

Scania concentrate

Scania also produces coolant with antifreeze and corrosion protection in the form of a concentrate.

Part no.	Volume litres	Volume US gallons
1 894 323	5	1.3
1 894 324	20	5.3
1 894 325	210	55
1 894 326	1,000	264

Topping up

Coolant must only be topped up with pre-mixed coolant. The pre-mixed coolant can either be concentrate mixed with clean freshwater or pre-mixed coolant from the factory. Use only pure

© Scania CV AB 2026, Sweden

fresh water that is free from particles, sludge and other impurities.

IMPORTANT!

Containers used for mixing coolant must be intended for the purpose and free from any dirt or contaminants. When the containers not in use they must be kept closed to avoid collecting dirt and dust.

Note:

Within the coolant change interval, coolant may only be reused if it has been cleaned of dirt, sludge and particles. If the coolant is contaminated with oil or fuel, it must not be reused.

Addition of antifreeze and corrosion protection to water

The coolant should contain 35-55% by volume antifreeze (ethylene glycol) and corrosion protection. The percentage varies depending on the need for antifreeze.

A minimum of 35% by volume of Scania antifreeze and corrosion protection is needed to provide sufficient corrosion protection.

Measure the ethylene glycol content (antifreeze and corrosion protection) with a refractometer following the instructions in the Checking the coolant's antifreeze and corrosion protection section.

Risk of freezing

IMPORTANT!

The engine should not be subjected to heavy loads when ice starts to build up in the cooling system.

As the coolant starts to freeze, the water in the coolant starts to crystallise and the percentage of ethylene glycol in the coolant therefore rises. If freezing produces a great increase in the amount of ice, circulation problems could arise. There is no risk of damage by freezing if the content of Scania antifreeze and corrosion protection, or an equivalent mixture of a similar product, is at least 35% by volume.

Minimal ice formation in the coolant sometimes causes disruptions without any risk of damage. For example, the auxiliary heater may not work for up to 1 hour after the engine has been started.

© Scania CV AB 2026, Sweden

Antifreeze and corrosion protection concentration table, litres

Freezing point (°C)	-21	-24	-30	-38	-50	Cooling system volume
Ethylene glycol (vol. %)	**35**	**40**	**45**	**50**	**60**	**(litres)**
Ethylene glycol (litres)	11	12	14	15	18	30
	14	16	18	20	24	40
	18	20	23	25	30	50
	21	24	27	30	36	60
	25	28	32	35	42	70
	28	32	36	40	48	80
	32	36	41	45	54	90
	35	40	45	50	60	100
	39	44	50	55	66	110
	42	48	54	60	72	120
	46	52	59	65	78	130
	49	56	63	70	84	140
	53	60	68	75	90	150
	56	64	72	80	96	160
	60	68	77	85	102	170
	63	72	81	90	108	180
	67	76	86	95	114	190
	70	80	90	100	120	200

© Scania CV AB 2026, Sweden

Antifreeze and corrosion protection concentration table, US gallons

Freezing point (°F)	-6	-11	-22	-36	-58	Cooling system volume
Volume of ethylene glycol (%)	**35**	**40**	**45**	**50**	**60**	**(US gallons)**
Volume of ethylene glycol (US gallons)	2.9	3.2	3.7	4	4.8	7.9
	3.7	4.2	4.8	5.3	6.3	10.6
	4.8	5.3	6.1	6.6	7.9	13.2
	5.5	6.3	7.1	7.9	9.5	15.9
	6.6	7.4	8.5	9.2	11.1	18.5
	7.4	8.5	9.5	10.6	12.7	21.1
	8.5	9.5	10.8	11.9	14.3	23.8
	9.2	10.6	11.9	13.2	15.9	26.4
	10.3	11.6	13.2	14.5	17.4	29.1
	11.1	12.7	14.3	15.9	19	31.7
	12.2	13.7	15.6	17.2	20.6	34.3
	12.9	14.8	16.6	18.5	22.2	37
	14	15.9	18	19.8	23.8	39.6
	14.8	16.9	19	21.1	25.4	42.3
	15.9	18	20.3	22.5	26.9	44.9
	16.6	19	21.4	23.8	28.5	47.6
	17.7	20.1	22.7	25.1	30.1	50.2
	18.5	21.1	23.8	26.4	31.7	52.8

© Scania CV AB 2026, Sweden

Checking the coolant level

WARNING!

Do not open the coolant filler cover in the expansion tank if the engine is hot. Hot coolant and steam may spray out and cause burns. If the cover has to be opened do it slowly to release the pressure before removing the cover.

Use protective gloves as coolant can cause irritation if it comes in contact with the skin.

IMPORTANT!

It is not permissible to top up large amounts of coolant via the expansion tank. Filling via the expansion tank leads to air locks in the cooling system which can lead to e.g. cavitation damage to the coolant pump shaft seal. If a large amount of coolant needs to be added, follow the instructions in the section Filling coolant.

Only pour pre-mixed coolant into the cooling system.

The following instructions apply to Scania expansion tanks. For other types of expansion tanks, follow the manufacturer's instructions.

1. Open the expansion tank cover and check the coolant level.
   - The right coolant level on a cold engine is at the height of the lower edge of the filler neck.
   - The right coolant level on a hot engine is approximately 25 mm (1 in) over the lower edge of the filler neck.
2. Top up with coolant as necessary.

© Scania CV AB 2026, Sweden

Checking the coolant's antifreeze and corrosion protection

Tool

Designation	Illustration
Refractometer	
	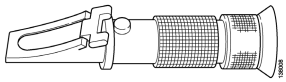

WARNING!

Avoid skin contact with coolant as this may cause irritation to the skin. Wear eye protection and gloves when handling coolant.

IMPORTANT!

Use only pure fresh water that is free from particles, sludge and other impurities.

1. Pour a small amount of coolant into a container and check that the coolant is pure and clear.
2. Change the coolant if it is contaminated or cloudy.
3. Measure the antifreeze and corrosion protection content with the refractometer.

The following rules apply to ethylene glycol-based coolant:

- The antifreeze and corrosion protection content must be a minimum of 35 per cent by volume for corrosion protection to be sufficient.
- An antifreeze and corrosion protection content greater than 55 percent by volume impairs the ability to protect against frost.
- If ice forms in the coolant, there are disruptions initially, but there is no immediate risk of damage. The engine should not be subjected to heavy loads when ice starts to form.

© Scania CV AB 2026, Sweden

Changing the coolant and cleaning the cooling system

Draining coolant

WARNING!

Do not open the coolant filler cover in the expansion tank if the engine is hot. Hot coolant and steam may spray out and cause burns. If the cover has to be opened do it slowly to release the pressure before removing the cover.

Use protective gloves as coolant can cause irritation if it comes in contact with the skin.

Environment

Use a suitable container. Used coolant must be disposed of as specified in national and international laws and regulations.

© Scania CV AB 2026, Sweden

Draining coolant with coolant pump

Tool

Number, designation	Illustration
2 443 679, coolant pump	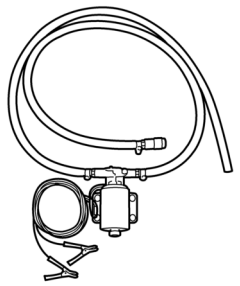 360 625

1. Open the expansion tank cover.
2. Place the hose from the coolant pump in an empty container.
3. Connect the pump to the draining nipple in the cylinder block. See illustration.
4. Connect the pump’s 2 cable terminals to the battery’s negative and positive terminal. Make sure that the drainage starts. If draining does not start: Change the position of the cable terminals.
5. Repeat the procedure at the cooling system's lowest drainage point. The location of the lowest drainage point on the engine may differ depending on engine application.

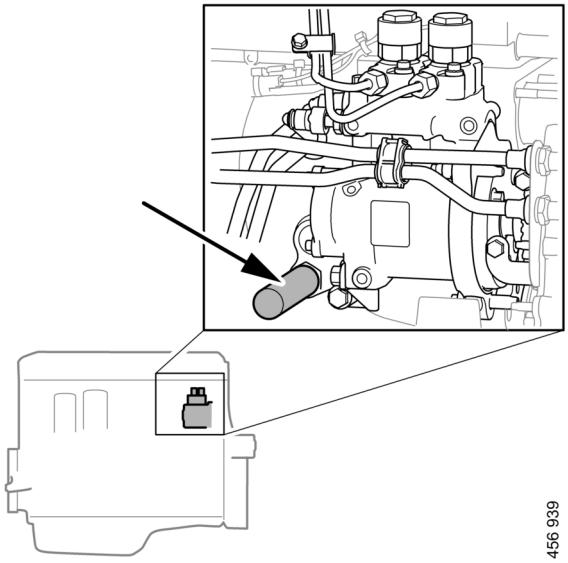

© Scania CV AB 2026, Sweden

Draining coolant with coolant trolley

Tool

Designation	Illustration
588 540 Coolant trolley	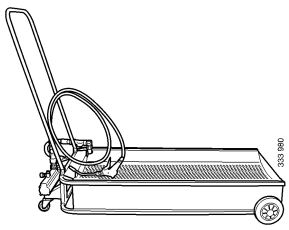
99 301 Adapter	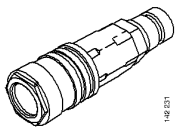

1. Open the expansion tank cover.
2. Position the hose from the coolant trolley in an empty container.
3. Connect the trolley to the draining nipple in the cylinder block. See illustration. An adapter must be used when using a trolley.
4. Drain the coolant.
5. Repeat the procedure at the cooling system's lowest drainage point. The location of the lowest drainage point on the engine may differ depending on engine application.

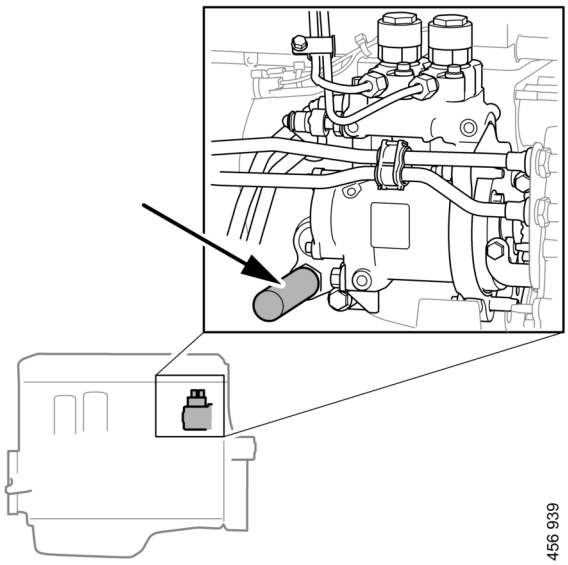

© Scania CV AB 2026, Sweden

Cleaning the cooling system

Note:

Clean the cooling system more often than specified in the maintenance interval if necessary.

External cleaning: Cleaning the radiator and the charge air cooler

IMPORTANT!

Do not use caustic soda or other alkaline detergent as this could damage the aluminium.

Read the warning text on the detergent packaging.

1. Check that the radiator and the charge air cooler are not clogged on the air side and that the discs are not damaged.
2. Carefully scrape away any deposits from the radiator discs. Use a paraffin-based engine cleaner if necessary.
3. Carefully straighten bent discs using a steel brush or similar.

Internal cleaning: Removing oil and grease in the cooling system

Environment

Use a suitable container. Used coolant must be disposed of as specified in national and international laws and regulations.

Always fit a new thermostat and a new cover to the expansion tank after cleaning, as the oil in the cooling system destroys the seals. If the engine is fitted with a coolant filter, also renew this filter.

It may be necessary to wash it multiple times if the cooling system is very dirty. One cause of contamination can be that oil is lying on top of the coolant and collecting high up in the cooling system. If several rinses are needed, this is not necessarily because work has been carried out incorrectly. Oil residues often need to be rinsed repeatedly from the expansion tank and the external heating system to be completely clean.

Repeated washing is more effective and preferable to using higher concentrations of detergent (max. 10%) or cleaning for a longer period (max 30 minutes).

If only a small amount of dirt has collected in the expansion tank after cleaning, one extra rinse and clean of the expansion tank only is usually sufficient. There is no need to clean the whole cooling system again.

1. Run the engine until it has reached operating temperature if possible and then drain the cooling system following the previous description.
2. Remove the thermostat.
3. Fill the cooling system with clean hot water mixed with detergent 2 479 017. Detergent 2 479 017 must make up 5-10% (depending on the degree of dirt) of the total coolant volume.

   If detergent 2 479 017 is not available, use a dishwashing detergent for domestic appliances that does not foam. Concentration 1%.
4. Warm up the engine for approximately 20-30 minutes. Remember to switch on the cab heating system, if one is installed.
5. Drain the cooling system.
6. Fill the cooling system with clean, hot water and run the engine for about 20-30 minutes.
7. Repeat steps 3-6 if the cooling system is not clean.
8. Drain the water from the cooling system.
9. If necessary, clean the expansion tank by detaching all hoses and rinsing and cleaning with a degreasing agent and a dish brush.

   Alternatively, dismantle the expansion tank and clean it with water with 10% of detergent 2 479 017. Fill the expansion tank with the mixture, shake it and drain it. Renew the cover of the expansion tank.
10. Fit a new thermostat.
11. Fill the cooling system with new coolant as described in the next section.
12. Check again whether further dirt or oil has collected in the expansion tank. Decide whether it is necessary to carry out another full cleaning or whether only rinsing or cleaning of the expansion tank will suffice.

© Scania CV AB 2026, Sweden

Internal cleaning: Removing deposits in the cooling system

Environment

Use a suitable container. Used coolant must be disposed of as specified in national and international laws and regulations.

1. Run the engine until it has reached operating temperature if possible and then drain the cooling system following the previous description.
2. Remove the thermostats.
3. Fill the cooling system with clean hot water mixed with a radiator detergent that is based on sulfamic acid and contains dispersing agents. Follow the manufacturer's instructions for the concentration and cleaning period.
4. Run the engine for the specified time. Remember to switch on the cab heating system, if one is installed.
5. Drain the cooling system.
6. Fill the cooling system with clean, hot water and run the engine for about 20-30 minutes.
7. Drain the water from the cooling system.
8. Refit the thermostats.
9. Fill the cooling system with new coolant as described in the next section.

© Scania CV AB 2026, Sweden

Filling coolant

These procedures apply when the cooling system has been drained and needs to be filled with a large amount of coolant.

WARNING!

Use protective gloves as coolant can cause irritation if it comes in contact with the skin. Hot coolant can also cause scalding.

IMPORTANT!

Mix the coolant as specified in the section headed Coolant.

It is not permissible to top up large amounts of coolant via the expansion tank. Filling via the expansion tank leads to air pockets in the cooling system which can lead to e.g. damage to the coolant pump shaft seal. If a large amount of coolant needs to be added, follow the instructions in the section Filling coolant.

Never fill a hot engine with a large amount of cold coolant. There is a high risk of cracks forming in the cylinder block and cylinder heads

Do not start the engine until the correct coolant level has been obtained. If the engine is started with engine coolant level low, it can damage the coolant pump shaft seal, which leads to coolant leakage.

© Scania CV AB 2026, Sweden

Filling coolant with coolant pump

Tool

Number, designation	Illustration
2 443 679, coolant pump	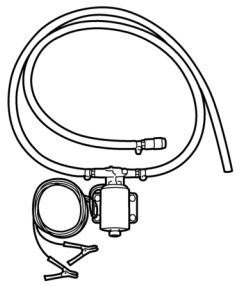 360 625

1. Open the expansion tank cover.
2. Connect the coolant pump to the filler nipple in the cylinder block. See illustration.
3. Connect the pump's 2 cable terminals to the battery's negative and positive terminal. Make sure that the filling starts. If the filling does not start: Change the position of the cable terminals.
4. Start the engine and run it at idling for 15 minutes.

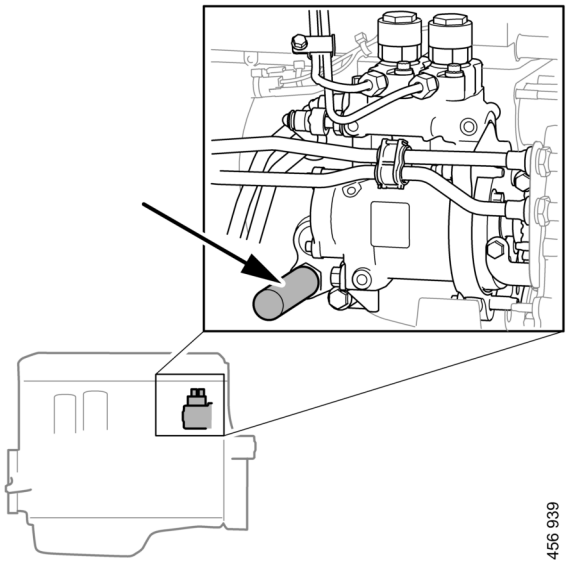

IMPORTANT!

It is very important that the engine is idling. Engine overspeed could damage the coolant pump shaft seal, which leads to coolant leakage.

5. Switch off the engine and fill with coolant to the maximum level through the expansion tank.

Air pockets may still be left in the cooling system. These will disappear after the engine has been operated for a period of time. Therefore, the coolant may need topping up at a later stage.

© Scania CV AB 2026, Sweden

Refilling coolant with coolant trolley

Tool

Designation	Illustration
588 540 Coolant trolley	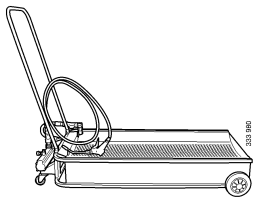
99 301 Adapter	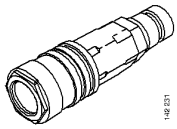

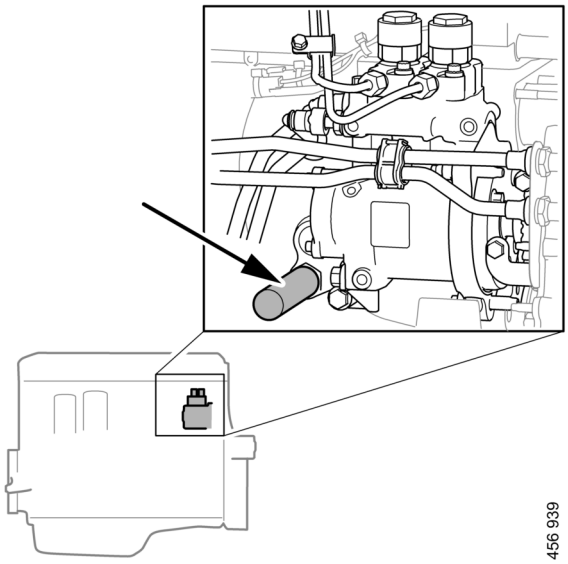

1. Open the expansion tank cover.
2. Connect the coolant trolley to the filler nipple in the cylinder block. See illustration. An adapter must be used when using a trolley.
3. Fill with coolant using coolant trolley to pump up to the maximum level of the expansion tank.
4. Disconnect the coolant trolley.
5. Start the engine and run it at idling for 15 minutes.

IMPORTANT!

It is very important that the engine is idling. Engine overspeed could damage the coolant pump shaft seal, which leads to coolant leakage.

6. Switch off the engine and fill with coolant to the maximum level through the expansion tank.

Air pockets may still be left in the cooling system. These will disappear after the engine has been operated for a period of time. Therefore, the coolant may need topping up at a later stage.

After filling, it may be good to start the engine and check that no coolant leakage occurs.

© Scania CV AB 2026, Sweden

Fuel system

Cleanliness requirements

IMPORTANT!

The whole fuel system is very sensitive to dirt and also very small particles. Foreign particles in the system can cause serious malfunctions. It is therefore very important that everything is as clean as possible when work is carried out on the fuel system. Clean the engine before carrying out repair work. If possible, a hot wash should be used.

It is strictly forbidden to carry out any machining work or work with compressed air near an open fuel system.

Be extra careful and always use clean, lint-free and dust-free clothes and disposable gloves when working on the fuel system. Scania recommends using Tegera 848 gloves.

Clean connections and the surrounding area before removal. When cleaning, cloths or paper which shed fibres must not be used. Use clean and lint free cloths, part number 588 879.

Plug or cover the connections during removal. Also clean the connections before the components are fitted. Place removed components on a thoroughly cleaned, dust-free surface. Scania recommends using a stainless steel bench top, part number 2 403 296. Cover the components with a lint free cloth.

Checking the fuel level

Check the fuel level and fill with fuel as necessary.

Note:

If the fuel tank has been run dry or if the engine has not been used for a long time, bleed the fuel system. See the section Venting the fuel system.

© Scania CV AB 2026, Sweden

Renewing the fuel filters

Renewal, cartridge filter

Tool

Number, designation	Illustration
99 654 VCI3	
588 793 Bleeding tool, fuel system	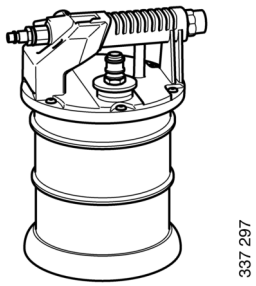 337 297
588 879, Lint free cloth	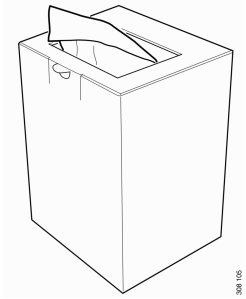 308 105
2 541 586, Plastic bag	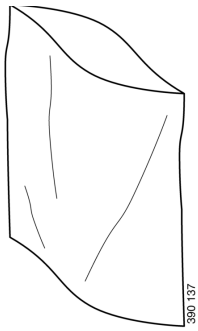 390 137

© Scania CV AB 2026, Sweden

Removal

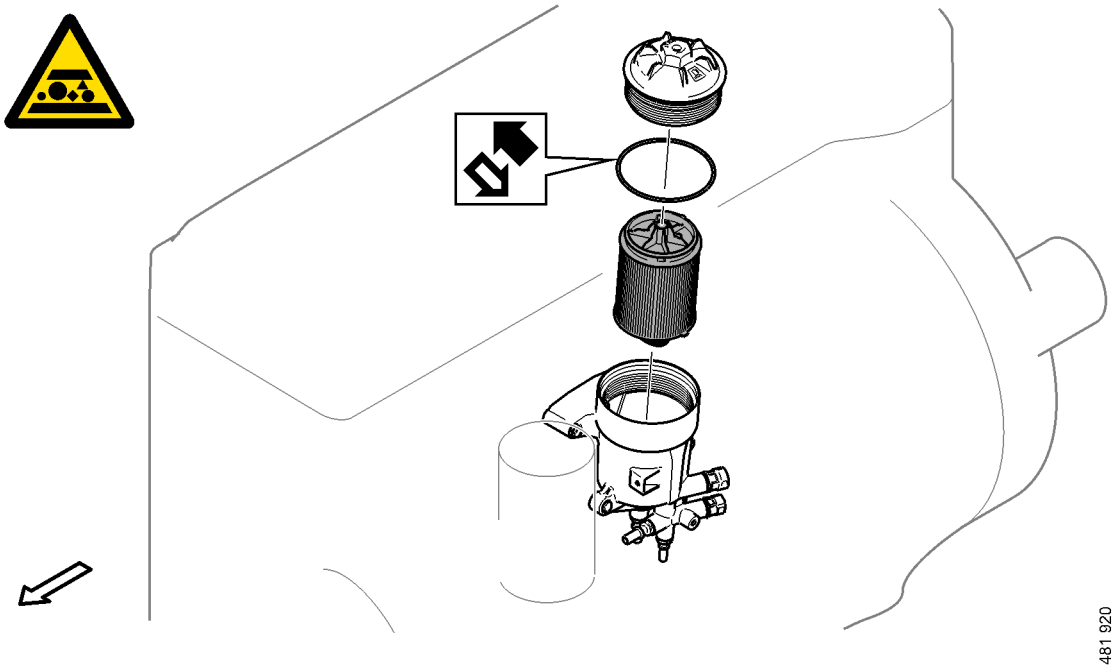

WARNING!

The vehicle ignition must be switched off. The feed pump must be stationary. No pressure is allowed to build up in the fuel system.

WARNING!

Clean tools before they are used and do not use any worn or chrome-plated tools. Material and flakes of chrome may come off.

IMPORTANT!

The contaminated fuel must not be poured back into the fuel tank.

Environment

Use a suitable container. The fuel collected must be disposed of as specified in national and international laws and regulations.

If the fuel tank is positioned higher than the fuel filter housing, the shut-off valve between the fuel

© Scania CV AB 2026, Sweden

tank and the fuel filter housing must be closed. This is to prevent fuel running into the fuel filter housing.

1. Clean around the cover on the fuel filter housing using *588 879 Lint free cloth*.
2. Unscrew the filter cover and lift it slowly together with the filter element. Detach the filter insert from the cover by screwing the cover half a turn. Place the filter element in a *2 541 586 Plastic bag*.
3. Draw out any remaining fuel and any particles using *588 793 Bleeding tool, fuel system*. Let *588 793 Bleeding tool*, fuel system remain in the fuel filter housing until it is completely emptied of fuel. Make sure there is no dirt in the fuel filter housing. This is particularly important above the pressure limiting valve; see illustration.

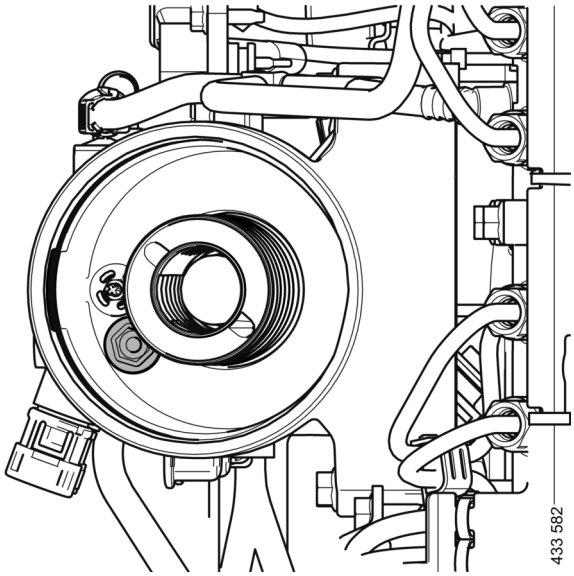

IMPORTANT!

It is important to remove any residual fuel and particles from the fuel filter housing. If this is not done, the fuel system may be contaminated and the components in the fuel system may be damaged.

4. Remove the O-ring from the filter housing cover.
5. Clean the cover externally and internally. Clean the cover threads and the groove where the O-ring will be fitted.
6. Check that the cover is intact. Replace the cover if any part is defective.

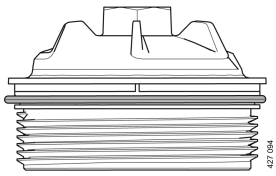

© Scania CV AB 2026, Sweden

Fitting

WARNING!

Clean tools before they are used and do not use any worn or chrome-plated tools. Material and flakes of chrome may come off.

1. Fit a new O-ring in the filter housing cover.
2. Screw the filter into place in the cover. Align the groove on the fuel filter with the cover.
3. Lubricate the O-rings with Vaseline. There are 3 O-rings that require lubrication.
4. Fit the fuel filter in the fuel filter housing. The fuel filter has 2 tabs that fit into the fuel filter housing.
5. Fit the cover. Tighten to 25 Nm.
6. Bleed the fuel system by switching on the ignition.
7. Start the engine and check that there are no fuel leaks.

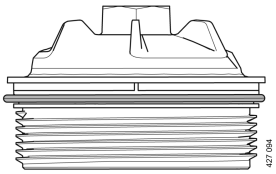

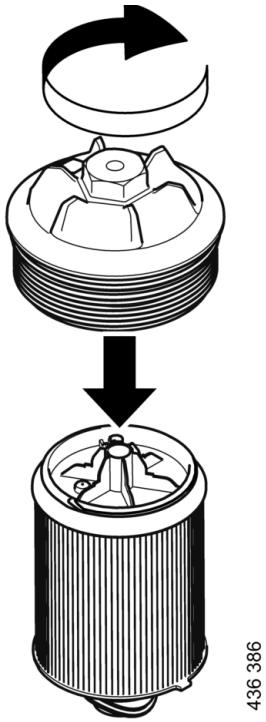

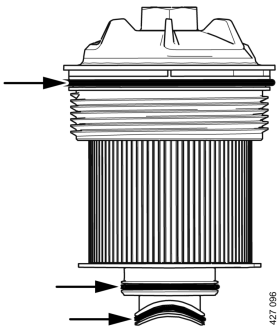

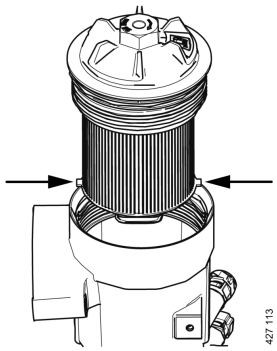

© Scania CV AB 2026, Sweden

Renewal, spin-on filter

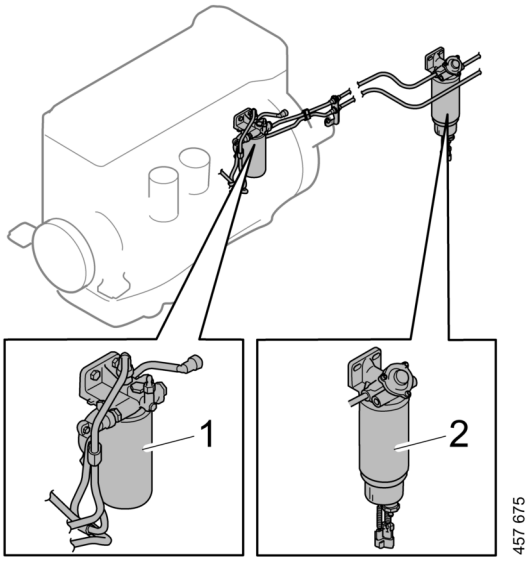

Tool

Designation	Illustration
588 994 filter wrench	
588 365 Oil filter pliers, 92-111 mm	

Removal

WARNING!

Clean tools before they are used and do not use any worn or chrome-plated tools. Material and flakes of chrome may come off.

IMPORTANT!

Only use original Scania filters as the wrong filter can cause damage to the filter and the centre tube.

Environment

Use a suitable container. The fuel collected must be disposed of as specified in national and international laws and regulations.

1. Rotate the shut-off cock on the fuel pipe.
2. Remove the old fuel filter. Use tool 588 994 together with a ratchet spanner and extension bar. If there is space, tool 588 365, 92–111 mm can also be used.
3. Lubricate the O-ring on the filter with clean engine oil.
4. Fill the filter with clean fuel.
5. Screw the filter into position until the O-ring rests against the filter head. Tighten the filter another 3/4 turn by hand.
6. Open the shut-off cock on the fuel pipe and check that the fuel system is sealed.
7. Bleed the fuel system.
8. Start the engine and check for leakage.

© Scania CV AB 2026, Sweden

Renewal – Water separating prefilter, spin-on filter

Before starting work, close the drain tap on the fuel pipe and place a container under the filter. Clean the exterior of the filter with a damp cleaning cloth.

WARNING!

Clean tools before they are used and do not use any worn or chrome-plated tools. Material and flakes of chrome may come off.

Environment

Use a suitable container. The fuel collected must be disposed of as specified in national and international laws and regulations.

1. Disconnect the electrical cable from the contact housing.
2. Open the drain tap and let the fluid run down into the container. Unscrew the bowl.
3. Unscrew the filter from the filter head.
4. Lubricate the O-ring in the bowl with clean engine oil.
5. Screw the bowl onto the new filter by hand. Close the drain tap by hand.
6. Lubricate the O-ring on the filter with clean engine oil and fill the filter with clean fuel.
7. Screw the filter into position until the O-ring rests against the filter head. Tighten the filter another 3/4 turn by hand.
8. Open the shut-off cock on the fuel pipe and check that the fuel system is sealed.
9. Connect the electrical cable to the contact housing.
10. Bleed the fuel system.

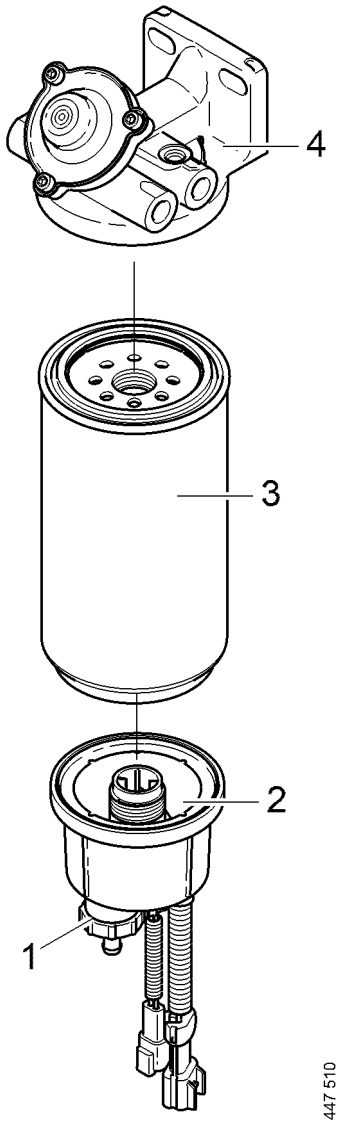

1. Drain tap.

2. O-ring in bowl.

3. Fuel filter.

4. Filter head.

© Scania CV AB 2026, Sweden

Venting the fuel system

Continuous bleeding

Air may collect in the upper part of the pressure filter housing. The pressure filter housing has continuous venting in order to prevent air circulation in the fuel system.

The continuous venting leads away any air in the pressure filter housing back to the fuel tank with the return fuel.

The continuous venting is controlled by the supply pressure and is always active, even if there is only fuel in the fuel filter housing.

Filter-dependent fuel supply

If there is no fuel filter in the fuel filter housing or it is incorrectly fitted, the fuel system will not supply the engine with fuel. The fuel system will start working again when a fuel filter is correctly placed in the fuel filter housing.

© Scania CV AB 2026, Sweden

Renewing the fuel tank venting filter

1. Remove the hose from the filter and then remove the filter.
2. Clean around the tank pick-up unit and along the rubber hose.
3.
4. Clean the surface where the filter is to be fitted.
   - Use water and detergent for coarse dirt.
   - Use a degreasing agent for grease and oil.
   - Use chemically clean petrol for adhesive residue.
5. Adjust the tank ventilation connection to the correct position.
6. Wait so that the detergent has time to evaporate before the filter is fitted.
7. Fit the filter to the hose.
8. Remove the protective tape from the fuel filter. Push the filter vertically into position by hand and maintain the pressure for at least 5 seconds.
9. Refit the hose.

Note:

The ventilation filter must be positioned vertically in order to function correctly. Ensure that there are no kinks in the hose or any chafing or over-extension. The ideal fitting temperature of the component parts is 21°C-38°C.

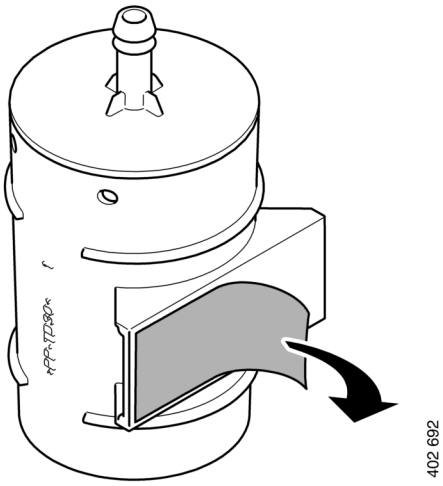

Protective tape on venting filter.

© Scania CV AB 2026, Sweden

Other

Checking the drive belt

IMPORTANT!

Before starting, make a note of how the drive belt is fitted. Refit the drive belt with the same direction of rotation as it had before removal.

1. Check the drive belt thoroughly, particularly at the idler rollers.
2. Check the drive belt for cracks. Renew the drive belt if deep cracks have formed.

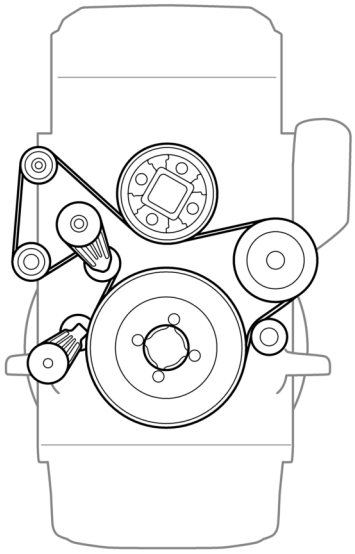

Note:

Small and shallow cracks are normal and form after only a few hours of operation. They do not mean that the drive belt needs to be renewed. If there are many deep cracks, or if parts of the drive belt have started to come off, the drive belt must then be renewed.

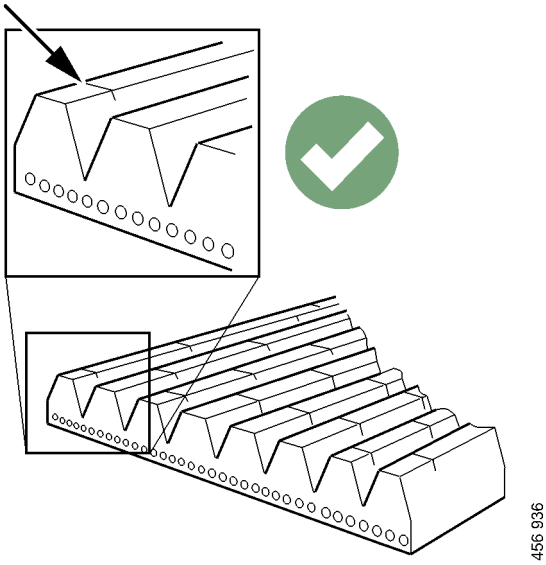

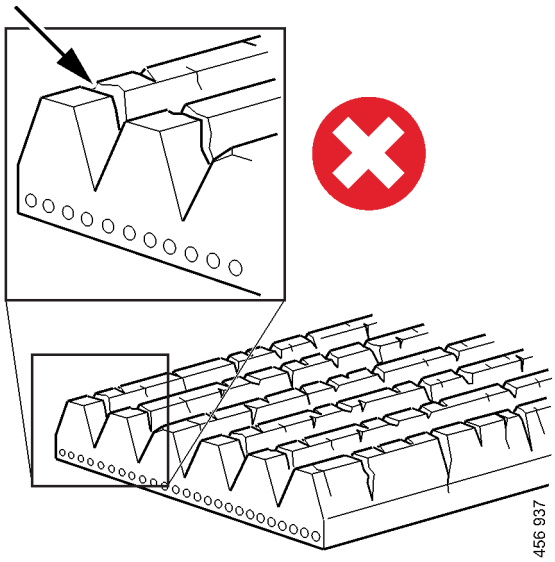

© Scania CV AB 2026, Sweden

3. Check drive belt wear. Renew the drive belt if it is too worn.

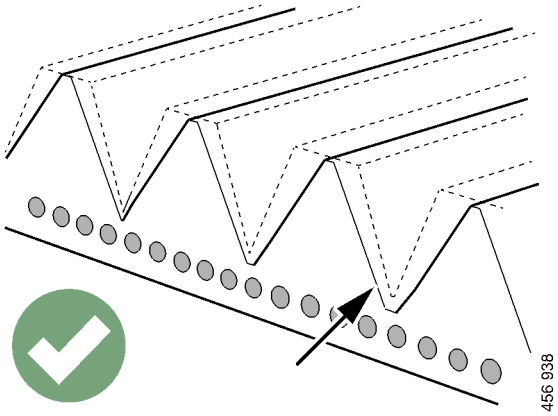

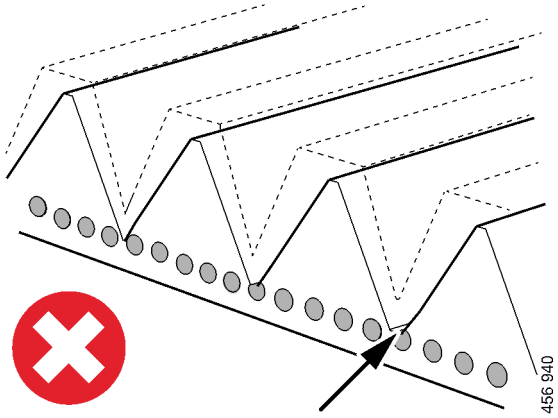

© Scania CV AB 2026, Sweden

Checking for leakage

IMPORTANT!

If serious leakage occurs, contact your nearest workshop.

1. Start the motor.
2. Check for oil, coolant, fuel, air or exhaust leakage.
3. Tighten or renew leaking connections. Check the overflow holes which show whether the O-rings between the cylinder liners and crankcase are leaking.
4. Check whether the drain hole on the coolant pump is blocked. If there is leakage, renew the seal in the pump or the complete coolant pump assembly.

© Scania CV AB 2026, Sweden

Checking and adjusting the valve clearance

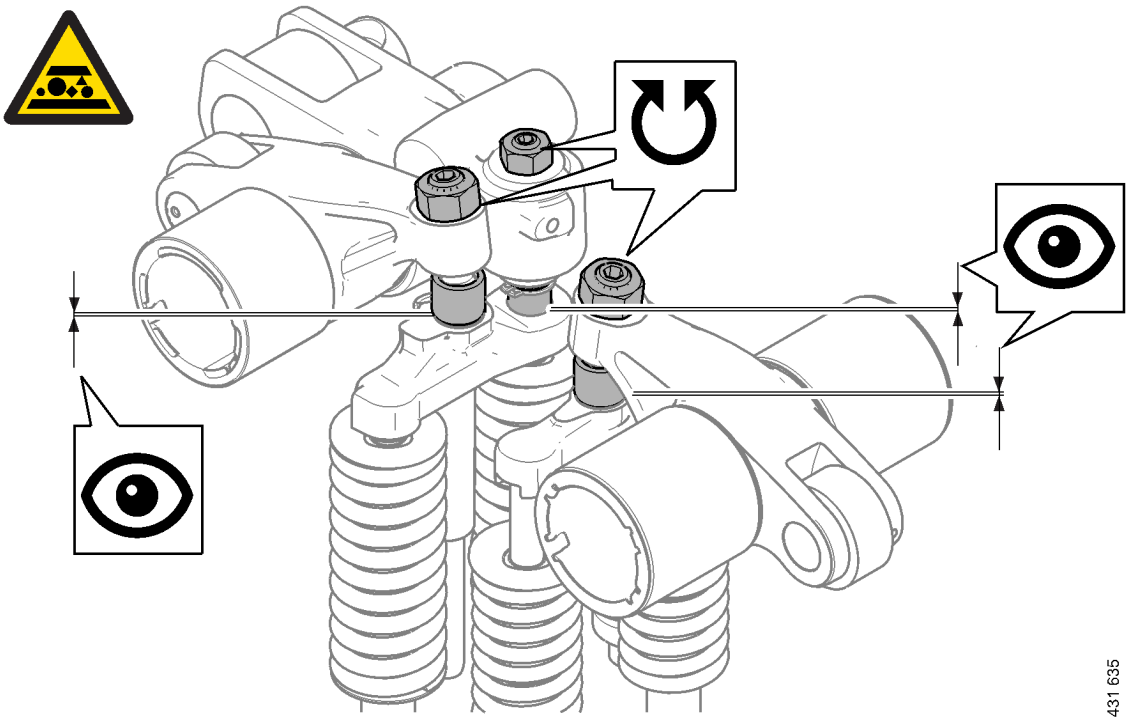

Tool

Number	Designation	Illustration
2 976 504	Turning tool	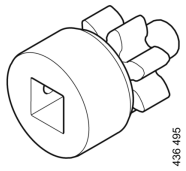
3 027 706	Feeler gauge, valve adjustment 0.35-0.45-0.70-0.80-1.5 mm	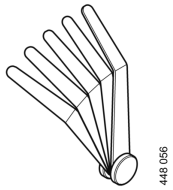
2 794 606	Turning tool for the top side of the flywheel housing	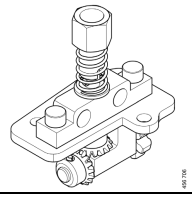

© Scania CV AB 2026, Sweden

Tightening torque	
Adjusting screw nut on rocker arm for intake and exhaust valves	35 Nm (26 lb/ft)
Nut for adjusting screw on rocker arm to compression release brake	24 Nm (17.7 lb/ft)
Plastic rocker cover	20 Nm (14.75 lb/ft)
Aluminium rocker cover	24 Nm (17.7 lb/ft)

Valve adjustment

WARNING!

Block the starting device. If the engine starts unexpectedly, there is a serious risk of injury.

WARNING!

This method exposes the cams and there is a increased risk of damage to bearing surfaces. Make sure that no dirt or foreign particles end up in areas covered by the rocker cover.

The rocker cover and the parting plane against the camshaft frame must be cleaned before the rocker cover can be removed.

IMPORTANT!

Check and adjust the valve clearance when the engine temperature falls below 60°C.

Note:

Carry out the working without pausing, so that no step is overlooked.

Carry out the check and adjustment of the valve clearance at the normal interval, which is every 2,000 operating hours.

© Scania CV AB 2026, Sweden

1. Read the instructions in the section Cleanliness. If a high-pressure washer is not available, the specific areas you will be working on must be cleaned locally.
2. Remove the lower blanking piece (2).
3. Remove the rubber plug (3).
4. Fit *2976 504 Turning tool.*

IMPORTANT!

Remember to remove the turning tool from the flywheel following adjustment.

IMPORTANT!

Only hand tools may be used.

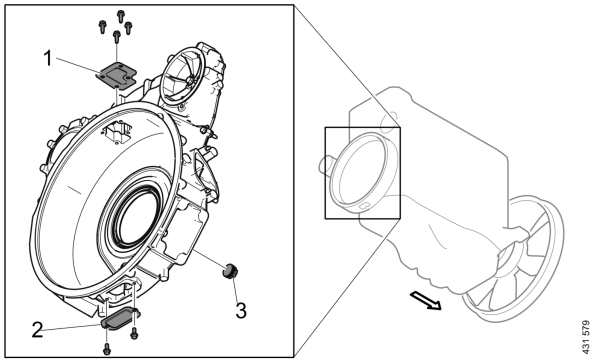

1. *Upper blanking piece*
2. *Lower blanking piece*
3. *Rubber plug*

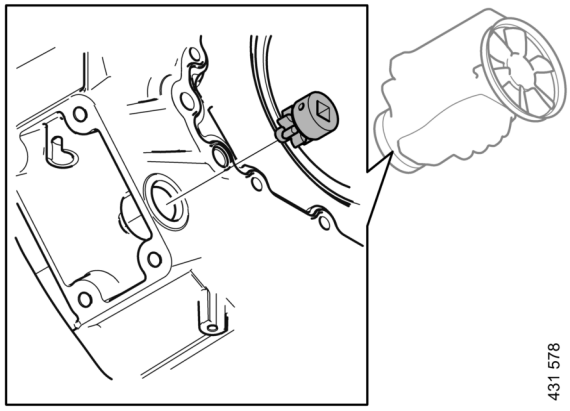

Turning tool.

© Scania CV AB 2026, Sweden

5. When the rocker cover is removed, it spills dirt in the camshaft frame.

   Brush off any loose dirt and collect with an industrial vacuum cleaner. Then clean with aqueous soft soap solution and dry with a lint free cloth.

6. Clean the entire rocker cover, make sure that the parting plane between the rocker cover and the camshaft frame is also well cleaned.

   Pay particular attention to the area between the cable duct and the rocker cover along the long left-hand side. A lot of dirt collects here which must be removed before the rocker cover can be removed.

7. Lift the rocker cover onto a clean surface and place it with the oily side facing down. Wipe off the sealing surface before starting work. Take extra care on the left-hand side next to the cable duct. Always ensure the exposed valve mechanism is protected and covered when the rocker cover is removed.

8. When working on a cylinder, carefully fold away part of the protective cover and wipe the feeler gauge clean before each measurement.

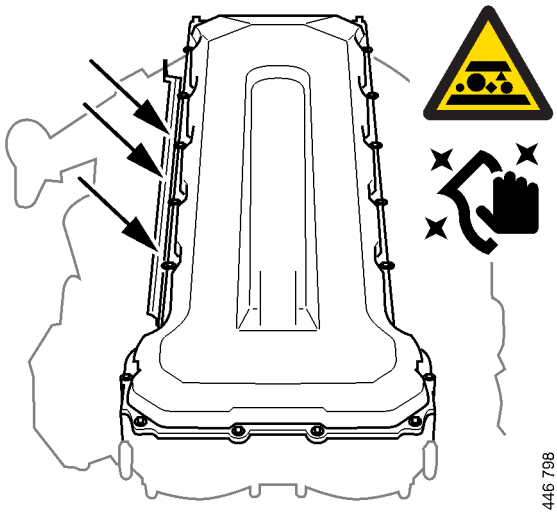

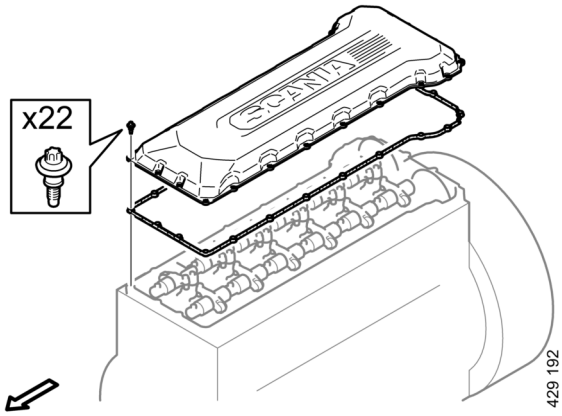

© Scania CV AB 2026, Sweden

9. Stick the feeler gauge under the pressure pad of the rocker arm.

   Adjust the valves using *3 027 706 Feeler gauge, valve adjustment 0.35-0.45-0.70-0.80-1.5 mm.*
10. Loosen the lock nut.
11. Adjust.
12. Tighten the lock nut.
13. When moving to another cylinder, push aside the protective cover to expose the working area and cover the area you are not working on. Loosen the lock nut.

Tightening torque	
Adjusting screw nut on rocker arm for intake and exhaust valves	35 Nm (26 lb/ft)
Nut for adjusting screw on rocker arm to compression release brake	24 Nm (17.7 lb/ft)

Valve clearance	
Intake valve	0.45 mm
Exhaust valve	0.70 mm
Valve for compression release brake	1.50 mm

14. After moving the rocker cover to a clean workbench, remove the old gasket and wipe any excess oil off the sealing surface. Use cable ties and wrap a cleaning paper around the top to reach hard-to-access areas. Wipe the inside of the rocker cover clean to avoid spillage when fitting. Clean the crankcase ventilation duct to ensure good sealing.

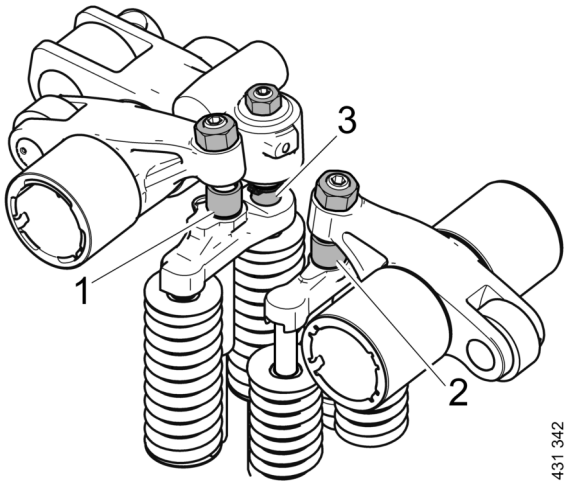

1. *Exhaust valve*
2. *Intake valve*
3. *Valve for compression release brake*

© Scania CV AB 2026, Sweden

Valve adjustment procedure

The engine must be cold when the valve clearance is adjusted. Make sure that the clearance between the teeth in the transmission timing gear wheel is behind and not in front of the teeth in the direction of rotation by carrying out the following steps:

1. Turn the flywheel until the mark is in the TDC position.
2. Turn the engine ~ 20° in the opposite direction of rotation.
3. Rotate the flywheel according to the table below.
4. Adjust the valve clearance.

Adjust all valves in the same cylinders for the same angle.

	Mark on flywheel – lower window	Mark on flywheel – upper window	Cylinder
1 rotation	350 ± 2°	170 ± 2°	1
	110 ± 2°	290 ± 2°	5
	230 ± 2°	50 ± 2°	3
2 rotations	350 ± 2°	170 ± 2°	6
	110 ± 2°	290 ± 2°	2
	230 ± 2°	50 ± 2°	4

5. Adjust the valve clearance.

   Make sure that the tip points towards the edge of the flywheel teeth, see illustration.

   Adjust all valves of a cylinder to the same angle.

   Continue in the direction of engine rotation.

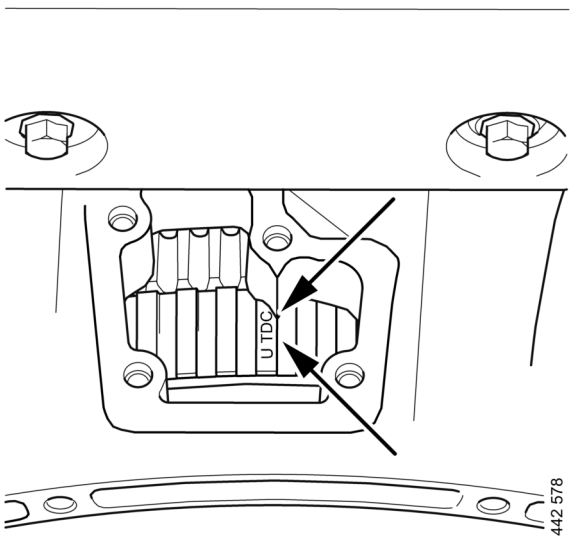

© Scania CV AB 2026, Sweden

Fitting, rocker cover

IMPORTANT!

Put on a new pair of disposable gloves before handling the new gasket.

1. Check that the camshaft frame and rocker cover do not have any visible damage.
2. Clean the contact surfaces on the rocker cover and camshaft frame.

3. Fit a new gasket in the rocker cover.

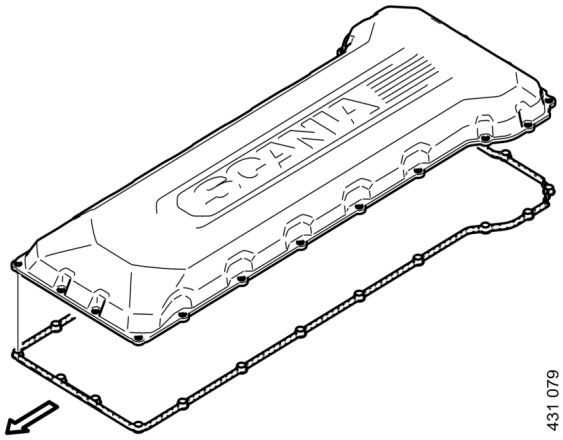

4. Fit the rocker cover.

   Check that the gasket does not end up outside the cover during fitting.

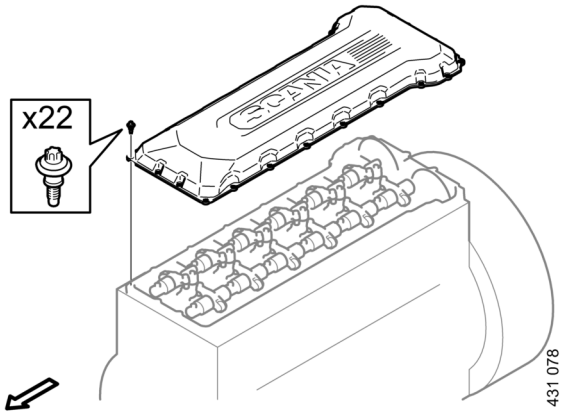

IMPORTANT!

Fit the rocker cover promptly to minimise the exposure time for the valve mechanism.

Tightening torque	
Plastic rocker cover	20 Nm (14.75 lb/ft)
Aluminium rocker cover	24 Nm (17.7 lb/ft)

© Scania CV AB 2026, Sweden

Renewing the reductant filter

1. Wipe clean around the filter housing to prevent impurities from penetrating it.
2. Remove the filter housing. Use a 46 mm socket.

WARNING!

There may be a lot of reductant in the filter housing and it may spill out. Wear protective gloves.

IMPORTANT!

Always rinse away reductant spillage on connections and other parts with lukewarm water to prevent corrosion. If reductant seeps into electrical connections or electrical cables, these must be renewed.

3. Remove the sealing diaphragm.
4. Remove the old reductant filter and fit a new one.
5. If the frost protection device in the filter housing comes loose, wipe both the frost protection device and filter housing thoroughly so that they are completely dry before they are assembled again.
6. Wipe the sealing diaphragm and fit it over the filter.

   Ensure that the edge of the diaphragm is sitting in the groove.
7. Lubricate the sealing diaphragm and threads with the accompanying spray.
8. Renew the O-ring. Place the new O-ring in the filter housing.
9. Refit the filter housing. Use a 46 mm socket. Tighten to 80 Nm (59 lb-ft).

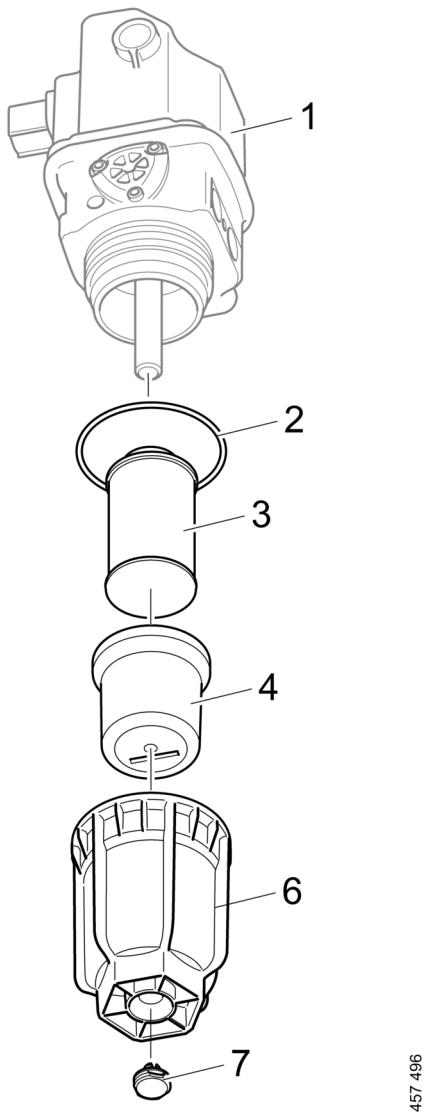

1. *Pump*
2. *O-ring*
3. *Filter*
4. *Sealing diaphragm*
5. *Antifreeze (not illustrated)*
6. *Filter housing*
7. *Ventilation cap*

© Scania CV AB 2026, Sweden

Cleaning the reductant tank filler filter

Make sure that the filler filter (1) is clean. If it is dirty: Clean the filler filter with clean water and refit it.

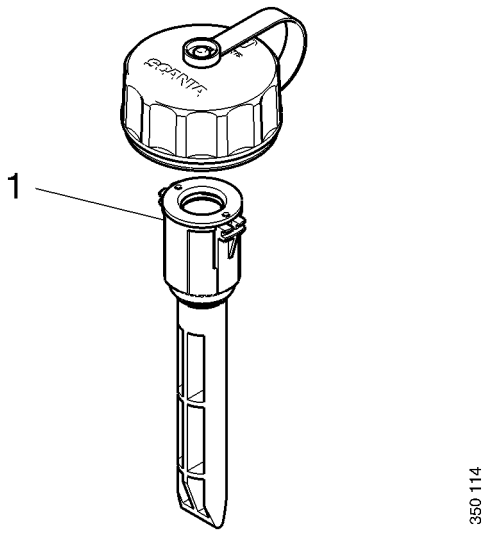

Checking venting functionality

1. Open the tank filler cover.
2. Remove the ventilation filter (2).
3. Blow air into the hose (3) and check that air passes along the hose and comes out through the filler. If not: Detach the bleed hose and check it and examine the vent opening in the tank. Clean with clean water if necessary.
4. Refit the filler cover.
5. Blow the filter clean; clean it with clean water.
6. Refit the filter.

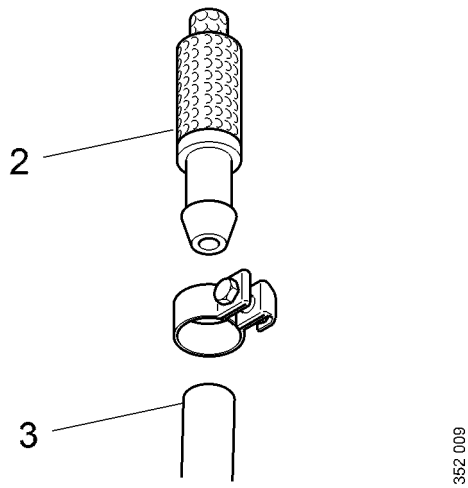

© Scania CV AB 2026, Sweden

Renewing the venting filter

The tank is supplied with a brass filter or with a plastic filter, depending on the variant selected. The plastic filter cannot be cleaned and needs to be renewed regularly.

1. Clean around the bleed hose connection on the tank.
2. Remove the hose and the old filter.
3. Clean the rubber hose.
4. Clean the surface where the filter is to be fitted.
   - Use water and detergent for coarse dirt.
   - Use a degreasing agent for grease and oil.
   - Use chemically clean petrol for adhesive residue.
5. Adjust the venting connection to the correct position.
6. Allow the detergent to evaporate.
7. Fit the filter on the hose.
8. Remove the protective tape from the fuel filter.
9. Fit the filter vertically and hold it for at least 5 seconds.
10. Refit the hose to the tank bleed connection.

Note:

Avoid folding, over stretching or chafing the hose. The ideal fitting temperature is 21°C - 38°C.

The ambient temperature of the filter must not exceed 90°C.

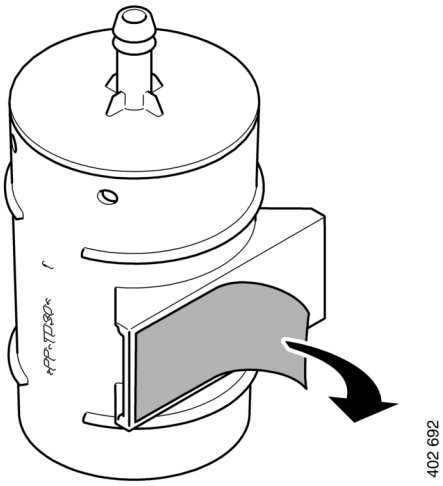

Protective tape on venting filter.

© Scania CV AB 2026, Sweden

Renewing the particulate filter

Tool

Number	Designation	Illustration	Tool board
99 405	Clutch bleeder	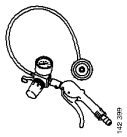	D6
99 654	VCI3		N/A
2 290 856	17 mm, Special socket, slotted, 1/2"	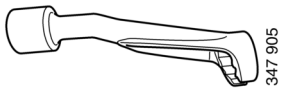	N/A

WARNING!

P3 type respiratory protective equipment/filter mask, eye protection and gloves should be worn for any work where there is a risk of exposure to dust from the particulate filter. A face mask, gloves and eye protection must be worn when cleaning the filter unit. Use protective equipment from the time the filter unit is exposed until the time cleaning is complete. Safety clearance for unprotected people is 3 m.

Do not eat, drink or smoke while work is in progress.

Any dust from the particulate filter should be removed using a vacuum cleaner with a HEPA filter that can filter out particles down to a particle size of 0.3 microns, in order to minimise exposure.

Wash your hands thoroughly after work on the particle filter.

IMPORTANT!

Be careful when handling the sensor body. It is sensitive and must not be bent or straightened. Renew the sensor if it is bent.

© Scania CV AB 2026, Sweden

1. Remove exhaust gas temperature sensor (1). Use 2 290 856 17 mm, Special sleeve, slotted, 1/2" if necessary.
2. Loosen the differential pressure sensor's harness-to-component connector (2).

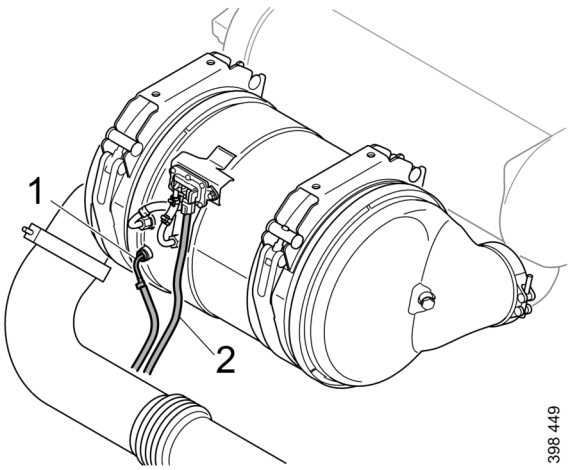

3. To facilitate fitting, use a marker pen to mark the position of the particulate filter. Make a mark on the oxidation catalytic converter in line with the particulate filter connections for the differential pressure sensor.

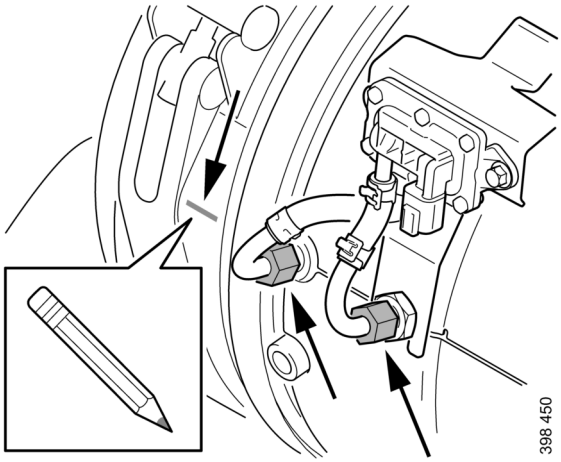

4. Remove the V-clamp at the particulate filter outlet (1) and the V-clamp holding the end plate (2). Remove the end plate (3).
5. Support the particulate filter with a jack or similar.

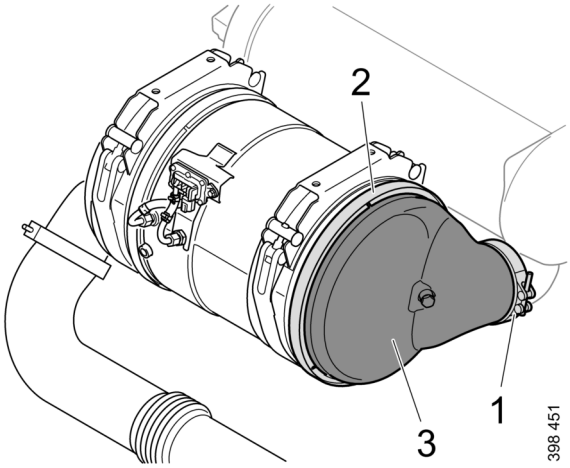

© Scania CV AB 2026, Sweden

6. Remove the V-clamp (2) and the band clamp around the particulate filter (1).

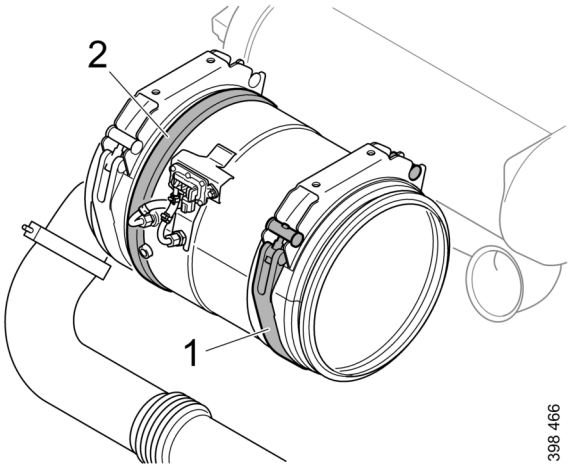

7. Lift off the particulate filter carefully.
8. Connect the engine to SDP3 using *99 654 VCI3*.

375 328

Follow the instructions in the wizard for entering a new ID number. In the wizard, data for soot and ash are also reset. See SDP3 > Checks and adjustments > Functions > Calibration > Powertrain > Emission control > Exhaust gas aftertreatment > New ID number upon renewal of the particulate filter or silencer.

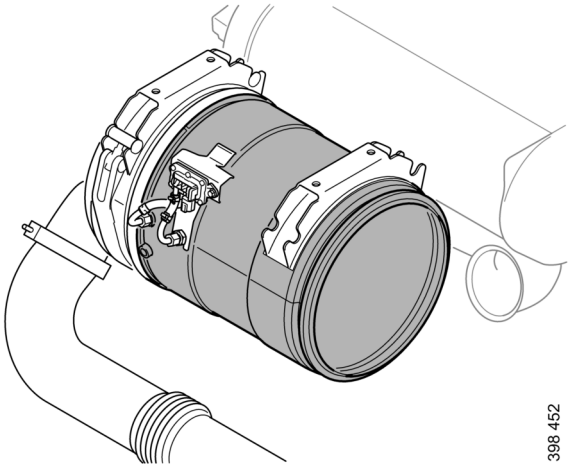

9. Detach the differential pressure sensor connections and remove the nut from the bracket.

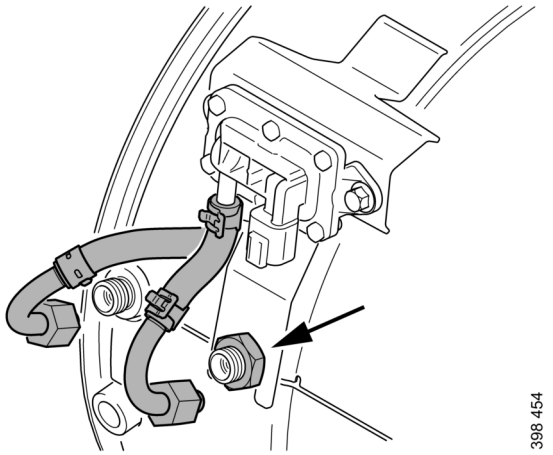

© Scania CV AB 2026, Sweden

10. Remove the differential pressure sensor and its bracket from the old particulate filter as described below:
    a) Tilt up the bracket and the differential pressure sensor (1).
    b) Pull off the bracket from the slot in the particulate filter (2).

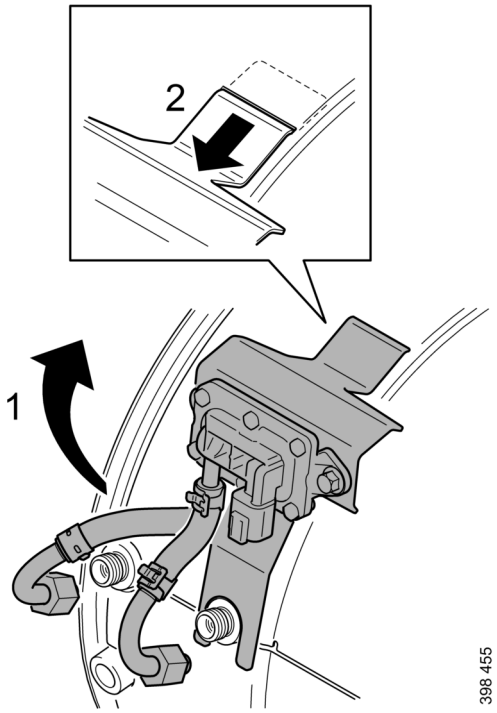

11. Remove one hose with accompanying pressure pipe from the differential pressure sensor and blow them clean using compressed air and 99 405 Clutch bleeder. Refit the hose and pressure pipe before removing the next one for cleaning with compressed air.

Note:

Make sure that the hoses are not mixed up when they are fitted on the differential pressure sensor.

12. Refit the differential pressure sensor and its bracket on the new particulate filter as described below:
    a) Push in the bracket into the slot (1).
    b) Tilt in the bracket and the differential pressure sensor against the particulate filter (2).

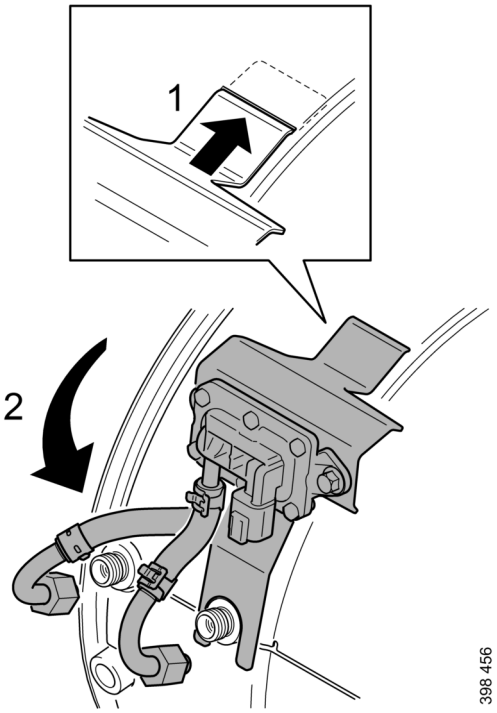

© Scania CV AB 2026, Sweden

13. Fit the bracket nut and differential pressure sensor connections. Tightening torque Nut, bracket for differential pressure sensor T141, 60 Nm.

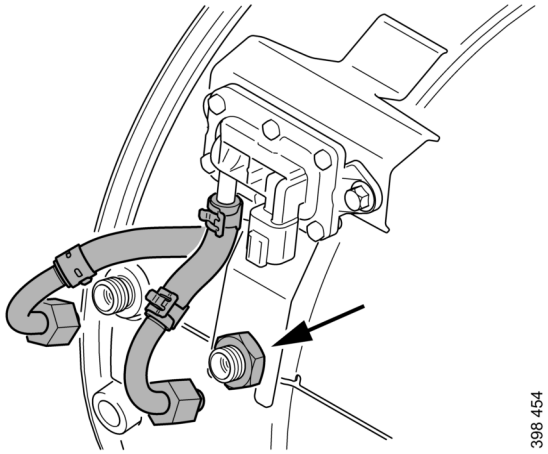

14. Clean the sealing surface of the oxidation catalytic converter (1). The surface should be free of gasket residue.
15. Fit new gaskets (2) to the sealing surfaces on the particulate filter (3) and the oxidation catalytic converter (1).
16. Fit the new particulate filter. Use a jack or similar to support the particulate filter.

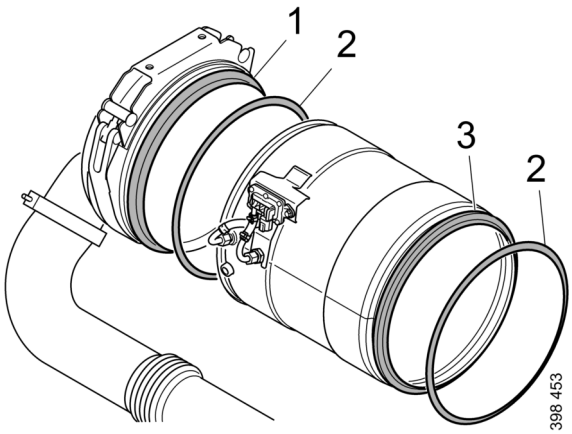

17. Fit the V-clamp (2) and the band clamp (1) loosely around the particulate filter.

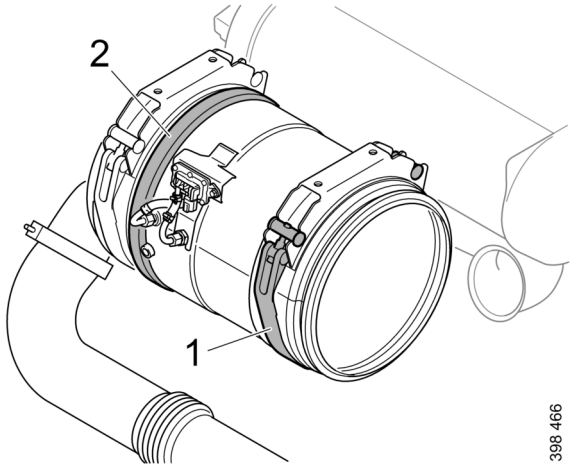

© Scania CV AB 2026, Sweden

18. Align the particulate filter outlet for the differential pressure sensor with the mark. Tighten the V-clamp and the band clamp around the particulate filter. Tightening torque, V-clamp, 20 Nm.

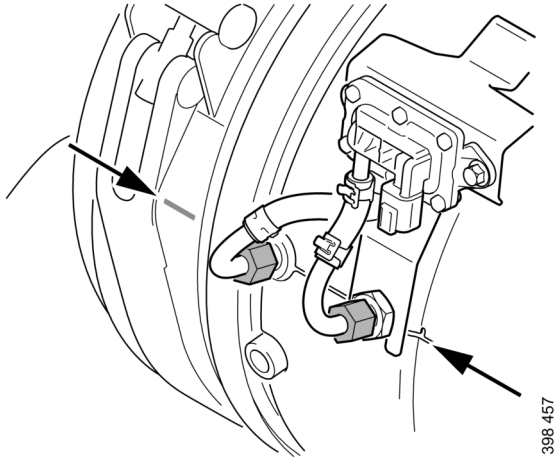

19. Clean the sealing surface on the end plate (3). The surface should be free of gasket residue.
20. Fit the end plate and V-clamp (2) which hold the end plate in place. Tightening torque, V-clamp, 20 Nm.
21. Fit the V-clamp at the particulate filter outlet (1). Tightening torque, V-clamp, 20 Nm.

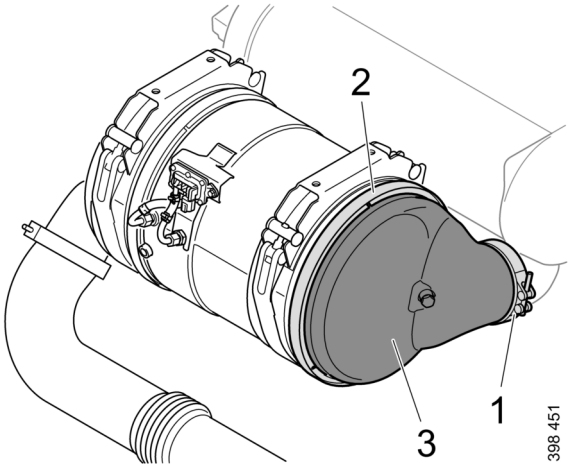

22. Fit the exhaust gas temperature sensor (1). Use 2 290 856 17 mm, Special sleeve, slotted, 1/2" if necessary. Tightening torque, Exhaust gas temperature sensor, 30 Nm.
23. Connect the differential pressure sensor harness-to-component connector (2).

IMPORTANT!

Be careful when handling the sensor body. It is sensitive and must not be bent or straightened. Renew the sensor if it is bent.

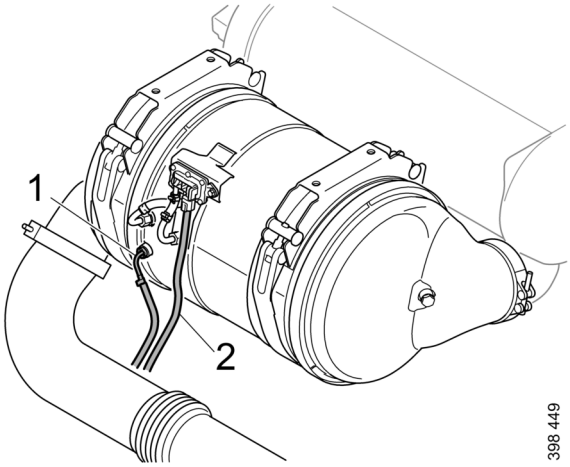

© Scania CV AB 2026, Sweden

Fuel quality requirements

Quality requirements and testing standards for the most important properties of different types of fuel are described in the Workshop Manual. This can be ordered from Scania dealers or directly from Scania.

Diesel

Characteristics

The quality of the diesel is very important for the operation and service life of the engine and the fuel system, and also for the engine performance.

REQUIREMENT!

The diesel should comply with the requirements of European standards EN590 or EN15940.

However, Scania accepts larger tolerances of certain properties. Please see the table below.

Characteristic	Requirements
Viscosity at 40°C (104°F)	1.4-4.5 cSt
Density at 15°C (59°F)	0.77-0.87 kg/dm^3
Ignitability (CET rating)	minimum 49
Lowest flashpoint	56°C (132°F)
Particulate contamination level	Classification 22/20/17 according to ISO 4406

Sulphur content

IMPORTANT!

The operator is responsible for using the correct type of diesel to ensure that local laws are complied with.

Important to use low sulphur diesel

For engines with an SCR system, it is important to use sulphur-free or ultra-low-sulphur diesel to ensure that the engine works correctly. If diesel with an excessive sulphur content is used, it can cause damage to the engine and the SCR system.

From January 2011 legislation in the USA and Europe requires all diesel engines not used on the road to be run on sulphur-free or ultra-low sulphur diesel.

REQUIREMENT!

In Europe, diesel must be sulphur-free in accordance with the standard EN 590. This means that the sulphur content must not exceed 10 ppm.

In the USA, the diesel must be ultra-low sulphur in accordance with the ASTM D975 standard. This means that the sulphur content must not exceed 15 ppm.

© Scania CV AB 2026, Sweden

Permitted sulphur content in diesel

Engine type	Max. sulphur content	Note
Engines without SCR system	4,000 ppm (0.4%)	If the sulphur content is higher than 2,000 ppm, the oil change intervals must be halved. A higher sulphur content than 4,000 ppm is not permitted, since this will result in engine damage.
Engines with SCR system only	500 ppm (0.05%)	A higher sulphur content than 10 ppm for Europe or 15 ppm for the USA may only be used where EU Stage III or less restrictive emission legislation applies.
Engines with DPF system	15 ppm (0.0015%)	If higher sulphur content is used, problems with exhaust gas aftertreatment may arise. This can in turn lead to a shortened service life of the engine and DPF system.

Diesel with a higher sulphur content than 500 ppm for engines with an SCR system

If diesel with a higher sulphur content than permitted is used on a short-term basis, this will not cause permanent damage to the SCR catalytic converter. The SCR catalytic converter may, however, require diesel with a low sulphur content for some time after this to regain its normal efficiency.

If diesel with too high a sulphur content is used for a prolonged period, there is a risk that the SCR catalytic converter will not operate correctly, which will result in a reduction in engine torque.

Temperature dependence of diesel

IMPORTANT!

Mixing kerosene or other paraffins with the diesel is prohibited. The injectors may be damaged.

It is not permissible to mix petrol with diesel. In the long term petrol can cause wear in the injectors and engine.

At temperatures lower than those specified for the diesel, paraffin wax may precipitate from the diesel and block filters and pipes. The engine can then lose power or stop.

The diesel is adapted for use in the specific climate of each country. If an engine is to be operated in a temperature zone with a temperature lower than normal, first identify the temperature properties of that particular diesel.

© Scania CV AB 2026, Sweden

Biodiesel (FAME)

Use of biodiesel

IMPORTANT!

For engines with SCR systems, a maximum of 20% mixture of biodiesel should be used.

When operating in markets requiring compliance with emission classes EU Stage II, EU Stage V or Korea Stage V, the mixture of biodiesel (FAME) must not exceed 8%.

Scania uses the term biodiesel to refer to a renewable diesel made from greases or oils and methanol. The biodiesel should conform to the requirements of European standard EN 14214 or Brazilian standard ANP-45. For biodiesel in accordance with EN 14214 or ANP-45, the generic term FAME is frequently used.

Normal diesel in accordance with EN 590 can contain up to 7% biodiesel from the diesel supplier. There are grades of diesel that comply with EN 590 but contain a higher mixture of biodiesel.

Storage of biodiesel

IMPORTANT!

Biodiesel must not be stored for more than 6 months.

Biodiesel has a maximum storage life of 6 months from the date of production to the expiry date. Biodiesel is affected by light, temperature, water, etc. during storage, which affects the characteristics and durability of the biodiesel.

Biodiesel also has lower stability against oxidation than diesel. This can result in a thickening of the biodiesel and blocking of parts of the fuel system, e.g. the fuel filter. Bacterial growth can occur when biodiesel is stored in a tank in unfavourable conditions. Avoid storage in barrels or auxiliary tanks, except when fuel turnover rates are high. Check tank cleanliness whenever refuelling takes place.

If the engine has been refuelled with biodiesel, and is stationary for a long period, condensation water can form in the fuel tank resulting in bacterial growth.

See also the section Preservative fuel.

Renewable diesel (HVO)

HVO is a synthetic diesel which is manufactured through the hydrogenation of plants and animal fats. To the user, HVO is reminiscent of diesel in accordance with EN590, apart from HVO having a somewhat lower density.

Scania approves the use of up to 100% HVO for all engines in accordance with the European standard EN 15940.

Gas-to-liquids (GTL)

GTL is a synthetic fuel that is often refined from natural gas. To the user, GTL is reminiscent of diesel in accordance with EN590, apart from GTL having a somewhat lower density and less odour.

Scania approves the use of up to 100% GTL in accordance with the European standard EN 15940.

© Scania CV AB 2026, Sweden

Reductant for SCR

IMPORTANT!

The operator is responsible for using the correct type of reductant to ensure that local laws are complied with.

REQUIREMENT!

In order for the emission control to meet the emission requirements set by the public authorities, the reductant should be specified in accordance with ISO 22241.

Reductant is a solution consisting of urea and water, and is usually called AdBlue®, DEF, ARLA 32 eller AUS 32depending on the market. If the engine is fitted with an SCR system, the reductant is added to the exhaust gases upstream of the catalytic converter. This reduces nitrogen oxide emissions.

Reductant in accordance with ISO 22241 contains 32.5% by weight of urea and freezes at approximately -11°C (12°F). When the solution freezes, ice and urea always maintain the same concentration. Always store reductant at a temperature between -11°C and 30°C (12-86°F).

Rec. % by weight of urea	Limit values according to ISO 22241
32.5%	31.8-33.2%

Reductant is normally colourless if no dye has been added. It is not harmful to the skin. Nor is it toxic in small quantities, but it tastes very unpleasant.

Reductant is highly corrosive. Therefore, rinse any reductant spillage from connections and other details using lukewarm water. Water works very well for cleaning purposes. Please use hot water. If reductant seeps into electrical connections or electrical cables, these must be renewed.

Reductant has a low surface tension and rapidly spreads over large areas, which then become very slippery.

Reductant can dry out and form white or greyish brown crystals or deposits that can be washed away with warm water.

The risk of crystal formation increases with low outdoor temperatures. When the outdoor temperature is below -20°C (-4°F), reductant dosing is switched off to avoid the risk of crystals forming in the SCR system.

© Scania CV AB 2026, Sweden

Engine preservation

Note:

The engine should be stored indoors, in a temperature-controlled room with constant (or near constant) temperature, protected from dirt and dust.

If the engine is not being used for an extended period its cooling system, fuel system and combustion chamber and outside must be protected against rust.

On delivery, the engine is protected by so-called VCI plastic. Provided that the VCI bag is intact and has not been removed, the engine can be stored for 3 years without any action required. After 3 years, the engine must be preserved again and the battery must be renewed.

The interval between each new Preparing for storage is then 24 months and the bag is renewed.

The VCI bag must be inspected at least once a year. If the plastic is missing or broken, it must be replaced with a new one immediately.

An alternative to preparing the engine for long-term storage is to start the engine and warm it up every 6 months.

Preparation means that the following measures are taken:

- The engine is cleaned thoroughly.
- Run the engine for a specific period using special preservative fuel, oil and coolant.
- Otherwise prepare the engine for storage (filter renewal, lubrication, etc.).

Preservative products

Preservative oil

Use a normal engine oil that meets the requirements in the Oil grade section.

Preservative coolant

Use coolant containing 50% by volume of glycol. Example: BASF MPG Glysacorr P113 and Valvoline Zerex P113 FP.

WARNING!

Ethylene glycol can be fatal if ingested and can cause skin irritation and eye damage.

© Scania CV AB 2026, Sweden

Preservative fuel

Preservative fuel must not contain biodiesel. Even small amounts of 5-10% biodiesel can have adverse effects on the engine when in long-term storage.

Long-term storage of diesel, where the diesel comes into contact with water, may lead to the growth of micro organisms (bacteria and fungus).

In order to minimise the growth of micro-organisms, preservative fuel should contain the following additives. The additives should be selected and added by the fuel supplier.

Preservative fuel should comply with the following requirements:

- 0% biodiesel.
- Max. sulphur content 50 ppm.
- Max. water content 200 ppm.
- The fuel must contain additives to stop the growth of micro-organisms.

Reductant

Over time, the water in the reductant evaporates and there is only urea left. The reductant then begins to crystallise. The reductant tank is not sensitive to crystals, but the ball valves in the reductant pump may become clogged. However, note that corrosion or other particles can also clog the ball valves.

All connections in the SCR system must be sealed before storage, so that the water in the reductant does not evaporate. The SCR system should then be stored in a cool location and not in direct sunlight. If the reductant tank has never been filled with reductant, it can be stored when empty for an unlimited time.

When the engine is taken into operation again, all reductant must be drained and changed. If old reductant is used, the SCR system will not work.

© Scania CV AB 2026, Sweden

Preparations for storage

Environment

Use a suitable container. Used oil, coolant and reductant must be disposed of as specified in national and international laws and regulations.

Note:

Do not remove the injectors.

1. Remove plugs and tape from the coolant connections, air intake and exhaust pipe.
2. Drain the oil.
3. Renew the oil filter and fuel filter.
4. Fill with engine oil to the minimum level on the oil dipstick.
5. Drain and flush the cooling system of any old coolant.
6. Top up with preservative coolant.
7. Mix preservative fuel in a can. Detach the fuel pipe at the feed pump suction pipe and connect a hose from the can.
8. Detach the fuel pipe at the overflow valve and connect a return hose to a separate can.
9. Connect and bleed the fuel system.
10. Start the engine and run it at about 1,100 rpm for 20 minutes.

    If the engine has an SCR system and the reductant tank is empty, it is possible to run the engine for this limited time without damaging the components of the SCR system. This applies if the engine is run without load.
11. If the engine has an SCR system and the reductant tank is full of reductant: Seal all connections in the SCR system.
12. Remove the rocker cover and lubricate the valve mechanisms, camshafts, roller tappets and gear transmission with plenty of preservative oil. Refit the rocker cover.
13. Drain the coolant if the engine is not to be stored with coolant in the system. Plug and tape all coolant connections if the engine is to be stored without coolant in the cooling system.
14. Renew the filter element in the air cleaner.
15. Cover the air intake and exhaust pipe.
16. Spray the alternator and starter motor with water-repellent anti-corrosive oil: CRC 226, LPS1 or the equivalent.
17. Spray the outside of smooth engine parts, first with penetrating preservative oil such as Dinitrol 25 B and then with Dinitrol 112 or equivalent.
18. Clearly mark the engine with the storage preparation date, and state that the engine must not be started or cranked.

© Scania CV AB 2026, Sweden

Batteries

WARNING!

Wear protective gloves and eye protection when charging and handling batteries. The batteries contain a highly corrosive acid.

Remove the batteries and trickle charge them at the battery charging station. This does not apply to batteries specified as maintenance-free by the manufacturer.

The same applies to short-term storage, even if the engine has not been prepared for storage as above.

Storage

After the preparation, the engine should be stored indoors in a dry location at room temperature. The engine must be packed in packaging made of VCI plastic to protect against dust, dirt and moisture.

When the engine is to be taken into operation again

1. If the engine is fitted with an SCR system: Drain and clean the reductant tank and fill with new reductant.
2. Remove plugs and tape from the coolant connections, air intake and exhaust pipe.
3. Fill the cooling system with coolant.
4. Drain the preservative oil.
5. Renew the oil filter and fuel filter.
6. Fill with new engine oil.
7. Remove the rocker cover and lubricate the valve mechanisms, camshafts, roller tappets and gear transmission with plenty of preservative oil. Refit the rocker cover.
8. Drain the preservative fuel from the fuel manifold.
9. Connect and bleed the fuel system.
10. Wash off any preservative oil on the outside using white spirit.

© Scania CV AB 2026, Sweden

Technical data

General data

Number of cylinders and configuration	6, straight
Working principle	4-stroke engine
Cylinder diameter (mm/in)	130/5.12
Piston stroke (mm/in)	160/6.30
Displacement (dm^3/in^3)	12.7/775.0
Firing order	1 - 5 - 3 - 6 - 2 - 4
Compression ratio	
DC 501/502/503/504/541/544	22.8:1
DC 505/506/507	19:1
Engine direction of rotation viewed from rear	Anticlockwise
Fan direction of rotation viewed from front	Clockwise
Cooling	Coolant
Valve clearances, cold engine	
Intake valve (mm/in)	0.45/0.018
Outlet valve (mm/in)	0.70/0.028
Number of teeth on the flywheel	152
Low idling (rpm)	500-975
Maximum full-load speed (rpm)	1,800/2,100
Fuel	Diesel
Approximate weight, without coolant and oil (kg/lb)	1,050/2,315

Lubrication system

Oil volume	See Maintenance
Oil cooler	Coolant cooled, full flow
Oil filter	Paper filter from Scania
Interval between oil changes (h)	500 [1]
Oil pressure (bar/psi)	
Normal with the engine at operating temperature, operating speed	3-6/43.5-87
Minimum permitted at idling speed	2.8
Crankcase pressure with closed crankcase ventilation (mbar/psi)	-5.4 to 2.0/-0.08 to 0.03

1. The change interval depends on the average load and type of engine oil. See the "Oil change intervals" section.

© Scania CV AB 2026, Sweden

Intake system

Permissible pressure drop in the intake system with cleaned or new filter (mbar/psi)	30/0.44
Permissible pressure drop in the intake system with blocked (dirty) filter (mbar/psi)	65/0.94

Cooling system

Coolant	See the chapter Cooling system
Coolant volume, excluding radiator (dm^3/US gallons)	25/6,6
Coolant volume including 1.1 m^2 radiator (dm^3/US gallons)	41/10,8
Coolant volume including 1.2 m^2 radiator (dm^3/US gallons)	48/12,7
Coolant temperature (°C/°F)	90-95/194-203
Number of thermostats	1
Thermostat opening temperature (°C/°F)	80/176 and 87/189

Fuel system

Injection system	XPI (Extra High Pressure Injection)
Engine management system	EMS
Fuel filter	Paper filter from Scania
Water separating prefilter	Paper filter from Scania
Filter for tank venting	Paper filter from Scania

Electrical system

Type	1-pin, 24 V, DC
Starter motor, standard equipment	1-pin, 24 V, 5.5 kW
Alternator, standard equipment	1-pin, 28 V, 100 A

© Scania CV AB 2026, Sweden

Tightening torque for screw joints

Screws and nuts

Hexagon screws, hexagon socket screws, Torx screws, hexagon nuts

Metric thread. Strength class 8.8/8.

Thread	Tightening torque	
	Nm	ft-lb
M4	2.9	2.1
M5	6	4
M6	9.5	7
M8	24	18
M10	47	35
M12	84	62
M14	135	100
M16	210	155
M18	290	214
M20	420	310
M22	580	428
M24	730	538

Flange screws with hexagonal head and hexagonal flange nuts

Metric thread. Strength class 8.8/8.

Thread	Tightening torque	
	Nm	ft-lb
M5	6.7	5
M6	10.2	8
M8	26	19
M10	50	37
M12	92	38
M14	149	110
M16	184	136

Self-fixing flange screws with hexagon head –MPoint

Only use Mpoint in joints intended for this type of screw.

Metric thread. Strength class 8.8.

Thread	Tightening torque	
	Nm	ft-lb
M5	4.8	3.5
M6	8.5	6.3
M8	20	14.8
M10	40	29.5
M12	70	51.6
M14	110	81.1
M16	170	125.4
M20	330	243.4

Metric thread. Strength class 10.9.

Thread	Tightening torque	
	Nm	ft-lb
M5	6.5	4.8
M6	11	8.1
M8	27	19.9
M10	55	40.6
M12	95	70.1
M14	150	110.6
M16	225	166
M20	440	324.5

© Scania CV AB 2026, Sweden

Hose clamps

Specifications in the tables show tightening torque when tightening by hand.

Note:

The maximum tightening torque for a new unfitted hose clamp is 1 Nm (0.7 ft-lb).

A = width (mm)	Tightening torque	
	Nm	ft-lb
7.5-9	1.5	1
12	5	4
20	10	7
25	20	15

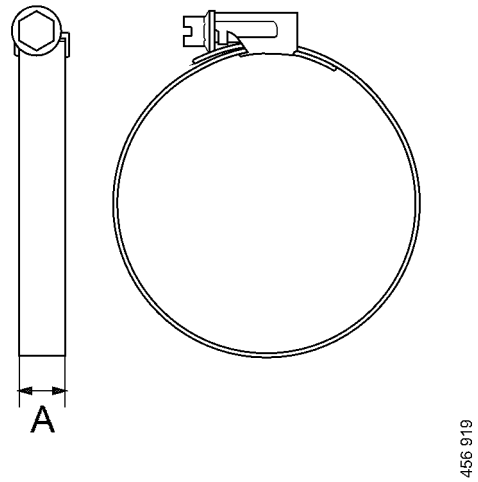

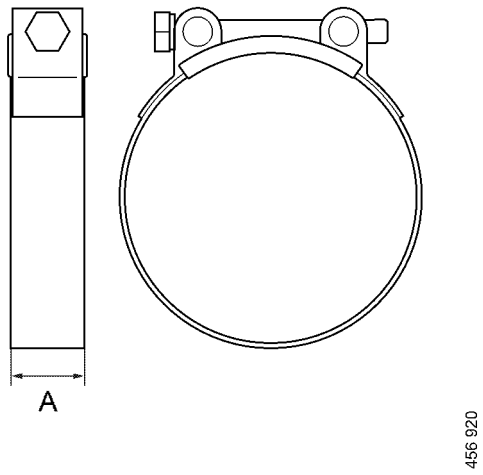

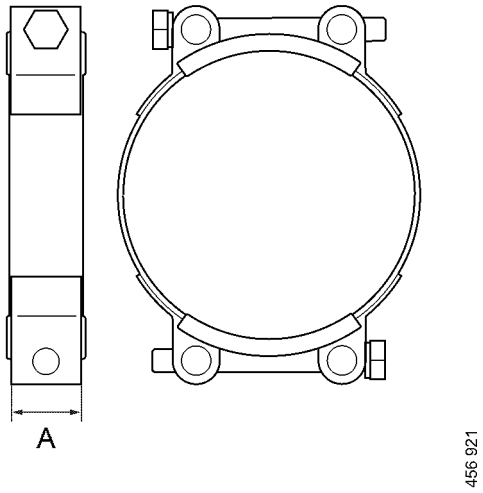

© Scania CV AB 2026, Sweden

Scania Assistance

Wherever you are, you can always get assistance from Scania's service organisation, Scania Assistance, 24 hours a day, every day of the year.

Always call the contact for your country.

Country	Tel.	Country	Tel.
Austria	+43 1 256 44 11	Latvia	+371 29 44 24 24
America	+1 (0) 800 272 2642	Lithuania	+46 8 52 24 24 24
America	1 800 272 2642	Luxembourg	+32 2 264 00 00
Argentina	800,999,722,642	Malaysia	1800 08 8500
Australia	611300722642	Malaysia	6035590907
Belgium	+32 2 264 00 00	Mexico	543327451092
Botswana	+267 72 102 591	Morocco	3222640000
Brazil	8000194224	Namibia	264634461352
Bulgaria	+359 88 666 0001	Netherlands	+31 76 52 54 111
Chile	188,800,722,642	Norway	+47 223 217 00
Colombia	1800184548	Peru	0800-51-727
Czech Republic	+420 225 020 225	Peru	(01)512-1877
Denmark	+45 333 270 44	Poland	+48 22 331 22 33
Estonia	Tallinn: +372 5153 388	Portugal	+34 91 678 9247
Estonia	Tartu: +372 5126 333	Romania	+40 723 27 27 26
Estonia	Pämu: +372 5071 477	Russia	+7(495) 925 77 75
Estonia	Rakvere: +372 5074 655	Singapore	6565917180
Finland	+358 10 555 24	Slovakia	+421,903,722,048
France	+33 2 414 132 32	South Africa	0 800 005 798
Germany	+49 261 887 8888	South Africa	+27 11 226 5005
Great Britain	0 800 800 660	Spain	+34 91 678 80 58
Great Britain	441274301260	Sweden	+46 42 100 100
Hungary	+36,209,727,197	Switzerland	+41 800 55 24 00
Ireland	+353 71 963 4000	Thailand	66819397525
Italy	+39046 1996222	Thailand	+1800 019 88
Latvia	+46 8 52 24 24 24	Uruguay	0 800 835 1

Other countries: +46 8 52 24 24 24

Note:

Calls will be recorded for training purposes.

© Scania CV AB 2026, Sweden